UL 858

STANDARD FOR SAFETY

Household Electric Ranges

ULNORM.COM : Click to view the full PDF of UL 858 2023

ULNORM.COM : Click to view the full PDF of UL 858 2023

UL Standard for Safety for Household Electric Ranges, UL 858

Sixteenth Edition, Dated November 7, 2014

Summary of Topics

This revision of ANSI/UL 858 dated August 2, 2023 is issued to incorporate the following:

> ***– Improvements to Abnormal Operation – Induction Surface Unit Cooking Oil Ignition Test; 47A.1, 60A.1 – 60A.3, 60A.5, Table 60A.1, 60A.8.1 – 60A.8.4, 60A.10, 60A.11, 60A.13 and Figure 60A.3***

Text that has been changed in any manner or impacted by ULSE's electronic publishing system is marked with a vertical line in the margin.

The new and revised requirements are substantially in accordance with Proposal(s) on this subject dated April 21, 2023.

All rights reserved. No part of this publication may be reproduced, stored in a retrieval system, or transmitted in any form by any means, electronic, mechanical photocopying, recording, or otherwise without prior permission of ULSE Inc. (ULSE).

ULSE provides this Standard "as is" without warranty of any kind, either expressed or implied, including but not limited to, the implied warranties of merchantability or fitness for any purpose.

In no event will ULSE be liable for any special, incidental, consequential, indirect or similar damages, including loss of profits, lost savings, loss of data, or any other damages arising out of the use of or the inability to use this Standard, even if ULSE or an authorized ULSE representative has been advised of the possibility of such damage. In no event shall ULSE's liability for any damage ever exceed the price paid for this Standard, regardless of the form of the claim.

Users of the electronic versions of UL's Standards for Safety agree to defend, indemnify, and hold ULSE harmless from and against any loss, expense, liability, damage, claim, or judgment (including reasonable attorney's fees) resulting from any error or deviation introduced while purchaser is storing an electronic Standard on the purchaser's computer system.

ULNORM.COM : Click to view the full PDF of UL 858 2023

No Text on This Page

ULNORM.COM : Click to view the full PDF of UL 858 2023

UL 858

Standard for Household Electric Ranges

Seventh Edition – April, 1952
Eighth Edition – December, 1956
Ninth Edition – October, 1966
Tenth Edition – July, 1969
Eleventh Edition – August, 1974
Twelfth Edition – January, 1979
Thirteenth Edition – October, 1986
Fourteenth Edition – September, 1993
Fifteenth Edition – April, 2005

Sixteenth Edition

November 7, 2014

This ANSI/UL Standard for Safety consists of the Sixteenth Edition including revisions through August 2, 2023.

The most recent designation of ANSI/UL 858 as an American National Standard (ANSI) occurred on August 2, 2023. ANSI approval for a standard does not include the Cover Page, Transmittal Pages, Title Page, or Preface.

The Department of Defense (DoD) has adopted UL 858 on November 9, 1976. The publication of revised pages or a new edition of this Standard will not invalidate the DoD adoption.

Comments or proposals for revisions on any part of the Standard may be submitted to ULSE at any time. Proposals should be submitted via a Proposal Request in the Collaborative Standards Development System (CSDS) at https://csds.ul.com.

Our Standards for Safety are copyrighted by ULSE Inc. Neither a printed nor electronic copy of a Standard should be altered in any way. All of our Standards and all copyrights, ownerships, and rights regarding those Standards shall remain the sole and exclusive property of ULSE Inc.

COPYRIGHT © 2023 ULSE INC.

ULNORM.COM : Click to view the full PDF of UL 858 2023

No Text on This Page

ULNORM.COM : Click to view the full PDF of UL 858 2023

CONTENTS

INTRODUCTION

1 Scope 9
2 Glossary 9
3 Units of Measurement 11
4 References 11

CONSTRUCTION

5 General 11
6 Frame and Enclosure 12
6.1 General 12
6.2 Accessibility of uninsulated live parts, film-coated wire, and moving parts 14
6.3 Expulsion of molten metal and burning insulation 18
6.4 Protection against spillage and cooking vapors 20
7 Assembly 21
8 Protection Against Corrosion 22
9 Power-Supply Connections 22
9.1 General 22
9.2 Permanently connected appliances 23
9.3 Cord-connected appliances 31
10 Internal Wiring 33
11 Separation of Circuits 42
12 Live Parts 43
13 Electrical Insulation 44
13.1 General 44
13.2 Film-coated wire (magnet wire) 45
14 Thermal Insulation 45
15 Lampholders 46
16 Grounding 47
16.1 Grounding means 47
16.2 Grounding link 47
16.3 Dead metal parts 48
17 Capacitors 48
18 Heating Elements 49
19 Motors and Motor Protection 50
19.1 Motors 50
19.2 Motor protection 50
20 Overcurrent Protection 51
21 Transformers 53
22 Accessories for Field-Installation 53
23 Filters and Vents 54
24 Receptacles 55
25 Switches and Controls 55
25.1 Switches 55
25.2 Temperature controls 57
25.3 Electromechanical and electronic controls 58
25.4 Programmable controls 58
26 Spacings 59
27 Spacings on Printed-wiring Boards 60
28 Adhesives 61
29 Ground-Fault, Arc-Fault, and Leakage Current Detectors/Interrupters 61
30 Surge Protective Device 62

ULNORM.COM : Click to view the full PDF of UL 858 2023

PROTECTION AGAINST INJURY TO PERSONS

GENERAL

31 Scope 62
32 Sharp Edges and Projections 62
33 Oven Racks, Drawers, and Sliding Cooking Units 62
34 Lamps 63
35 Strength of Glass Panels In Oven Doors 63
36 Strength of Mounting 64
37 Oven Doors – Integrity 64
38 Stability 65
38.1 General 65
38.2 Normal use 65
38.3 Abnormal use 65

SURFACE TEMPERATURES

39 General 67
39A Surface Temperature Test 67
40 Ambient Temperature 74
41 Temperature Measurements 74
42 Set-Up and Installation of Appliance 74
43 Operation of Appliance 74

IGNITION OF FABRIC

44 General 74
45 Test Fabric 74
46 Location of Controls 74
47 Operation of Controls 75
47A Closed Loop Cooking Using Surface Units 76
48 Determination of Size of Surface Units 76
49 Lamps 76
50 Surface-Unit Setback 77
51 Loading and Unloading of Ovens 78
52 Exposure of Bake Elements 78
53 Marking of Controls 78

PERFORMANCE

54 General 79
55 Leakage Current Test for Cord-Connected Appliances Rated 120 V, 1.75 kW or Less 79
55A Leakage Current Test for Cord-Connected Appliances 79
56 Input Test 83
57 Test on Flasher Units 83
58 Grounding Continuity Test 83
59 Temperature Test 84
59.1 General 84
59.2 Temperature measuring equipment 86
59.3 Procedure 88
59.4 Test enclosures 93
59.5 Wall-mounted ovens and counter-mounted cooking units 96
59.6 Small metal object heating test – induction cooktop surface units 102
59.7 Thermal aging 102

ULNORM.COM : Click to view the full PDF of UL 858 2023

60 Flare-Up Test 103
60A Abnormal Operation – Coil and Induction Surface Unit Cooking Oil Ignition Test 104
61 Abnormal Operation Test for Deep-Fat Fryers 109
62 Abnormal Operation – Stalled-Fan Test 109
63 Broil Test 111
64 Strain-Relief Test 111
65 Knockout Test 111
66 Dielectric Voltage-Withstand Test 111
67 Overload Test 112
68 Endurance Test 112
68.1 Temperature controls 112
68.2 Data entry components 112
68.3 Movable connections 114
68.4 Heating elements 114
69 Transient Surge Test for Solid-State Controls 114
70 Electromagnetic Susceptibility Tests for Solid-State Controls 114
71 Cleaning Tests 115
71.1 Spray cleaning solid state controls 115
71.2 Sponge washing test 115
72 Abnormal-Operation Test 117
72.1 General 117
72.2 Temperature-limiting devices in pilot-duty configurations 120
72.3 Abnormal operation test for warming elements 122
72.4 Appliance configuration 122
72.5 Test duration and operating conditions 122
72.6 Tests for elements exposed to oil-laden air, oven vapors, moisture and grease 123
73 Component Failure Test 125
74 Thermal Shock Test 126
75 Resistance to Moisture Tests 126
75.1 Spillage on horizontally mounted controls 126
75.2 Door switch flooding test 126
75.3 Spillage on sealed cooktops 126
75.4 Aging of cooktop seals and gaskets 127
75.5 Spillage on vents, slots, or openings 128
75.6 Spillage on under counter appliances 128
76 Impact Test 128
77 Structural (Load-Bearing) Adhesives Tests 129
77.1 General 129
77.2 Effect of temperature 129
77.3 Effect of humidity 129
77.4 Effect of cold 129
77.5 Effect of cycling 129
77.6 Effect of environmental conditions 1 130
77.7 Effect of environmental conditions 2 130
77.8 End-product evaluation 130
77A Abnormal Operation – Nichrome Wire Test 130

MANUFACTURING AND PRODUCTION TESTS

78 Dielectric Voltage-Withstand Test 132
79 Grounding Continuity Test 133

RATING

80 General 134

ULNORM.COM : Click to view the full PDF of UL 858 2023

MARKING

81 General 134
82 Visible During Installation and Inspection 135
83 Visible After Installation 138
84 Visible to the User 140
84.1 During servicing 140
84.2 During use 141

INSTRUCTIONS

85 General 142
86 Installation Instructions 142
87 User Instructions 145

CONTINUOUS-CLEANING OVENS

88 General 149
88.1 Scope 149
88.2 Construction 149
88.3 Performance 149

SELF-CLEANING OVENS

GENERAL

89 Scope 149

CONSTRUCTION

90 Materials 149
90.1 Oven coating 149
90.2 Smoke eliminators 150
90.3 Oven vent tubes and smoke diverters 150
91 Oven Door Latch/Interlock Assembly 150
92 Seals and Gaskets 151

PERFORMANCE

93 General 151
94 Temperature Test 151
94.1 General 151
94.2 Normal temperature 151
95 Latch-Solenoid Temperature Test 152
96 Abnormal Operation Test 152
96.1 Stalled fan 152
96.2 Drip bowls 153
96.3 Shorted thermostat 154
97 Component Failure Test 155
98 Oven-Door Latch Endurance Test 156
98.1 General 156
98.2 Test procedure 156
99 Window Impact Tests 157

ULNORM.COM : Click to view the full PDF of UL 858 2023

FIRE AND EXPLOSION

100 General 158
101 Test Electrodes 158
102 Test Samples 159
103 Installation of Test Sample 159
104 Fire and Explosion Within Oven 160
105 Emission of Carbon Monoxide 161
106 Vent Gases and Vapors 162
107 Vertical Cool-Air-Mixing Duct 163
108 Self-Cleaning of Removable Companion Oven Panels 163
109 Elevated Interlock Operating Temperature Tests 164

MARKING

110 Details 164

PLUG-IN MODULES

111 Scope 164
112 Glossary 164
113 Construction 165
114 Performance 165
114.1 General 165
114.2 Temperature test 165
115 Marking 165

COMMERCIAL OVEN CLEANERS USED IN SELF-CLEANING OVENS

116 Scope 165
117 Glossary 166
118 Oven Cleaner 166
119 Normal Temperature Test 167
120 Normal Operation Test 167
121 Abnormal Operation Tests 167
121.1 General 167
121.2 Oven cleaner self-clean test 167
121.3 Carbon monoxide measurement during self-cleaning cycle after preconditioning oven with oven cleaner 168
121.4 Test for fire at oven vent during self-cleaning cycle after preconditioning oven with oven cleaner 168

SUPPLEMENT SA – SAFETY OF SMART ENABLED HOUSEHOLD ELECTRIC RANGES

SA1 Scope 171
SA2 General 171
SA2.1 Controls 171
SA2.2 Separation of circuits 172
SA2.3 Communication and display devices 172
SA2.4 Communication conductors and cables 173
SA2.5 Communication connectors 173
SA2.6 Smart enabled or remote operation 173
SA3 Functional Safety 173
SA4 Resistance to Electro Magnetic Phenomena (Immunity) 175
SA5 Marking and Instructions 175

ULNORM.COM : Click to view the full PDF of UL 858 2023

SUPPLEMENT SB – SAFETY OF ELECTROMECHANICAL AND ELECTRONIC CONTROLS

INTRODUCTION

SB1 Scope 177
SB2 Glossary 178
SB2.1 General 178
SB2.2 Definitions relating to the use of UL 60730-1 controls 178
SB2.3 Definitions relating to UL 60730-1 classes of control functions 179
SB2.4 Definitions relating to UL 60730-1 calibration verification (Type 2) 180
SB2.5 Definitions relating to electronic circuits tested as part of the appliance to UL 60335-1 based requirements 180

CONSTRUCTION

SB3 Control – General 181
SB4 Controls – End Product Test Parameters 182
SB5 Control Functions 190
SB6 Evaluating Electronic Circuits and Controls when installed in the Appliance to UL 60335-1 Based Requirements 198
SB7 Evaluation of the Different Types of Control Circuits when Installed in the Appliance 198
SB7.1 All types of circuits 198
SB8 Protective Electronic Circuits 198
SB9 Operating Controls or Circuits that Perform Safety Critical Functions (PECs) 199

PERFORMANCE

SB10 General Conditions For Tests 199
SB10.1 Details 199
SB10.2 Intentionally weak parts 199
SB10.3 Test results determined by overcurrent protection operation 200
SB11 Low-Power Circuits 200
SB11.1 Low-power circuit determination 200
SB11.2 Low-power circuit fire tests 201
SB12 Abnormal Operation and Fault Tests 201
SB13 Programmable Component Reduced Supply Voltage Test 203
SB14 Electromagnetic Compatibility (EMC) Requirements – Immunity 203

MANUFACTURING AND PRODUCTION LINE TESTING

SB15 General 204

MARKINGS

SB16 General 204

ULNORM.COM : Click to view the full PDF of UL 858 2023

INTRODUCTION

1 Scope

1.1 These requirements cover household cooking equipment that is floor or cabinet supported, wall-mounted, counter mounted, or combinations thereof, rated 600 V or less, for installation in accordance with the National Electrical Code.

1.2 These requirements also cover ventilating hoods that are provided as an integral part of the cooking equipment, or that are separately supported on the building structure but arranged for factory-provided electrical connection to the cooking equipment with which they are intended to be used.

1.3 These requirements do not cover commercial cooking appliances.

1.4 These requirements do not cover special types of household cooking appliances. However, if such appliances are used as a part of a range, oven, surface assembly, or combination thereof, they will be judged on the basis of compliance with the requirements in this standard, insofar as they apply, and further appropriate examination and tests in accordance with the applicable requirements for electric heating appliances. These requirements do not cover all tests required on household cooking appliances having microwave ovens.

1.5 For the purpose of these requirements, cooking equipment includes ranges, ovens, surface assemblies, or combinations thereof. A range is considered to be a combination of a surface assembly with one or more ovens. Wall-mounted cooking equipment is considered to be those appliances intended for mounting in or on a wall or other vertical surface of a building or cabinet. Counter-mounted cooking equipment is considered to be those appliances intended for mounting in or on a counter or other horizontal surface of a building or cabinet.

1.6 In the following text, a requirement that applies only to one, two, or three of the classes of equipment coming within its scope – ventilating hoods, ranges, wall-mounted ovens, counter-mounted cooking units, or combinations thereof – are so identified. In the absence of such specific reference, or if the term appliance is employed, it is to be understood that the requirement applies to all of these classes of equipment.

2 Glossary

2.1 For the purpose of this standard the following definitions apply.

2.1.0 CLOSED LOOP COOKING – A cooking process whereby a feedback device, either wired or wireless, provides a parameter to the appliance control designed to automatically regulate the power of one or more surface units to achieve and maintain a target value.

Note 1: The feedback device of the closed loop cooking system may be integral to the appliance or be a peripheral device designed to work with the appliance control.

Note 2: The feedback parameter can be a sensing value, typically but not restricted to temperature, but also a target value, typically but not restricted to temperature or power level, that is processed by the appliance control(s) integral to the appliance.

2.1.1 COIL SURFACE UNIT – A sheathed heating cooktop element that is intended to directly support and heat a cooking utensil.

2.2 COMPONENT – A device or fabricated part of the appliance covered by the scope of a safety standard dedicated to the purpose. When incorporated in an appliance, equipment otherwise typically field

ULNORM.COM : Click to view the full PDF of UL 858 2023

installed (e.g. luminaire) is considered to be a component. Unless otherwise specified, materials that compose a device or fabricated part, such as thermoplastic or copper, are not considered components.

2.3 CONTINUOUS-CLEANING OVEN – An oven that utilizes treated surfaces on the interior of the oven and on insert panels of the oven to gradually reduce oven soil during normal baking or roasting operations.

2.3.1 COOKTOP – A combination of multiple cooktop elements and which may include controls on the top surface of an appliance.

2.4 COOKTOP ELEMENT – Any grill, griddle, deep-fat fryer, surface unit, or the like, on the top surface of an appliance, that is used as a source of heat.

2.4.1 ELECTRICAL CONNECTION – The physical interface between two points in a circuit such as spade terminals, pin terminals, micro switch contacts, relay contacts, timer contacts, crimped connections, and connections that are welded or soldered.

2.4.2 FLAME CYLINDER – A projection of a vertical cylinder having a diameter of 20 mm and a height of 50 mm.

2.5 HIGH-VOLTAGE CIRCUIT – A circuit involving a potential of not more than 600 V and having circuit characteristics in excess of those of a low-voltage circuit.

2.5.1 INDUCTION COOKTOP APPLIANCES – Appliances having single or multiple induction cooktop surface units that can heat at least one metallic vessel by means of eddy currents. The eddy currents are induced to the cooking vessel by the electromagnetic field of a coil.

2.5.2 INDUCTION WOK – Cooktop surface unit with concaved shaped surface unit to accept and heat a wok container.

2.6 LOW-VOLTAGE CIRCUIT – A circuit involving a potential of not more than 30 V and supplied by a primary battery, by a standard Class 2 transformer, or by a combination of a transformer and a fixed impedance that, as a unit, complies with all of the performance requirements for a Class 2 transformer. A circuit derived from a high-voltage circuit, by connecting resistance in series with the supply circuit as a means of limiting the voltage and current, is not considered to be a low-voltage circuit.

2.7 OVEN-DOOR INTERLOCK – An automatically-operated device that prohibits access to the interior of the oven during the high-temperature portion of the self-cleaning cycle.

2.7A REMOTE CLOSED LOOP COOKING – A closed loop cooking process whereby the target setting can be adjusted by an external device, such as a smart phone or computer.

2.8 SELF-CLEANING OVEN – An oven that utilizes elevated temperatures during a separate high-heat cycle to reduce oven soil to light ash.

2.9 SURFACE UNIT – A cooktop element intended to support and heat a cooking utensil.

2.10 TEMPERATURE-LIMITING CONTROL – A control that functions only under conditions that produce abnormal temperatures.

2.11 TEMPERATURE-REGULATING CONTROL – A control that functions to regulate the temperature of the appliance under normal conditions of use.

ULNORM.COM : Click to view the full PDF of UL 858 2023

2.12 THERMAL CUTOFF – A temperature or temperature and current sensitive device incorporating a thermal element for protecting a circuit by opening the protected circuit when the device reaches a predetermined temperature. It is intended to:

a) Reduce the risk of fire due to overheating of a product during abnormal operation; and

b) Operate only once, that is it can not be reset or reconditioned for reuse.

2.13 WARMING ELEMENT – A surface element intended for keeping previously cooked foods warm but not intended to continue the cooking process. Typically, a warming element is low wattage with a wattage rating of approximately 10 percent of a surface cooking element.

3 Units of Measurement

3.1 Values stated without parentheses are the requirement. Values in parentheses are explanatory or approximate information.

4 References

4.1 Any undated reference to a code or standard appearing in the requirements of this standard shall be interpreted as referring to the latest edition of that code or standard.

CONSTRUCTION

5 General

5.1 An appliance shall employ materials and components throughout that are acceptable for the use, and shall be made and finished with the degree of uniformity and grade of workmanship practicable in a well-equipped factory.

5.2 A material of asbestos composition shall not be used.

5.3 For an appliance provided with casters, the casters shall be adjustable so that when they are in the locked position, the appliance rests on feet or the equivalent on the floor.

5.4 A component of a product covered by this Standard shall:

a) Comply with the requirements for that component as indicated in the individual section covering that component;

b) Be used in accordance with its rating established for the intended conditions of use;

c) Be used within its established use limitations or conditions of acceptability; and

d) Additionally comply with the applicable requirements of this end product Standard.

Exception No. 1: A component of a product covered by this Standard is not required to comply with a specific component requirement that:

a) Involves a feature or characteristic not required in the application of the component in the product;

b) Is superseded by a requirement in this Standard; or

ULNORM.COM : Click to view the full PDF of UL 858 2023

c) Is separately investigated when forming part of another component, provided the component is used within its established ratings and limitations.

Exception No. 2: A component complying with a component standard other than those cited in this Standard is acceptable if:

a) The component also complies with the applicable component standard indicated in this Standard; or

b) The component standard:

1) Is compatible with the ampacity and overcurrent protection requirements in the National Electrical Code, NFPA 70, where appropriate;

2) Considers long-term thermal properties of polymeric insulating materials in accordance with the Standard for Polymeric Materials – Long Term Property Evaluations, UL 746B; and

3) Any use limitations of the other component standard is identified and appropriately accommodated in the end use application. For example, a component used in a household application, but intended for industrial use and complying with the relevant component standard may assume user expertise not common in household applications.

5.5 A component that is also intended to perform other functions, such as over current protection, ground-fault circuit-interruption, surge suppression, any other similar functions, or any combination thereof, shall comply additionally with the requirements of the applicable UL standard that cover devices that provide those functions.

Exception: Where these other functions are not required for the application and not identified as part of markings, instructions, or packaging for the appliance, the additional component standard need not be applied.

5.6 A component not anticipated by the requirements of this end product Standard, not specifically covered by the component standards noted in this Standard, and that involves a risk of fire, electric shock, or injury to persons, shall be additionally investigated in accordance with the applicable UL standard, and shall comply with 5.4 (b) – (e).

5.7 With regard to a component being additionally investigated, reference to construction and performance requirements in another UL end product standard is suitable where that standard anticipates normal and abnormal use conditions consistent with the application of this end product Standard.

ULNORM.COM : Click to view the full PDF of UL 858 2023

6 Frame and Enclosure

6.1 General

6.1.1 An appliance shall have an enclosure of moisture resistant material that encloses all live parts excluding power supply cords.

6.1.2 An enclosure shall be formed and assembled so that it:

a) Has the strength and rigidity necessary to resist the normal abuses to which it is likely to be subjected, without resulting in a risk of fire, electric shock, or injury to persons due to total or partial collapse with resulting reduction of spacings, loosening or displacement of parts, or other serious defects;

b) Reduces the likelihood of unintentional user contact with uninsulated live parts; and

c) Reduces the likelihood of electrical components and internal wiring being subjected to excessive moisture, grease, and the like as determined by the requirements in Protection Against Spillage and Cooking Vapors, 6.4.

6.1.3 Polymeric materials shall comply with the requirements in the Standard for Polymeric Materials – Use in Electrical Equipment Evaluations, UL 746C.

6.1.4 An enclosure shall be investigated with respect to size, shape, thickness of material, and acceptability for the particular application. An enclosure material shall be of such thickness or shape, or shall be reinforced to provide stiffness and protection not less than that provided by flat sheet steel with a minimum thickness of 0.020 in (0.51 mm).

Exception: A mesh barrier, when used below a live heater element inside an oven cavity, such as a broil element, shall be formed to provide stiffness and protection so that when a 2 lb (9N) force is applied at any point using the probe described in Figure 6.1 the mesh will not touch live parts or result in a reduction of spacing below the minimum acceptable values specified in Spacings, Section 26.

6.1.5 Aluminum not less than 0.034 in (0.86 mm) thick is acceptable in lieu of steel. Aluminum with a thickness less than 0.034 in shall be investigated on the basis of the stiffness and protection required by the application.

6.1.6 Sheet metal to which a wiring system is to be connected in the field shall have a thickness or shall be formed or reinforced to provide a stiffness and rigidity not less than that of steel sheet with a minimum thickness of 0.053 in (1.35 mm).

6.1.7 Cast metal to which a wiring system is to be connected in the field shall not be less than 1/8 in (3.2 mm) thick.

6.1.8 Glass, other than a cooking surface, constituting a part of the electrical enclosure:

a) Shall be reliably secured so that it cannot be readily displaced during normal use, and

b) Shall not be utilized for the support of any component.

6.1.9 With reference to 6.1.8, glass, other than a cooking surface, having a dimension, including a diagonal, more than 12 in (305 mm) shall:

a) Be a nonshattering or tempered type that complies with the requirements in the Performance Specifications and Methods of Test for Safety Glazing Materials Used in Buildings, ANSI Z97.1 Class A, or

b) Withstand the impact described in 76.1, without cracking or breaking to the extent that pieces are released or dropped from their normal position.

6.1.10 With reference to 6.1.8, glass of a cooking surface and constituting a part of the electrical enclosure shall comply with the impact test requirements described in 76.2 – 76.6.

6.1.11 A part relied upon for compliance with this Standard, when fabricated from polymeric materials, shall have clear traceability as to composition, ingredients, and processing for the fabricated part to the extent that the composition, ingredients, or process impacts the compliance of the product. Fabricated parts complying with the Standard for Polymeric Materials – Fabricated Parts, UL 746D, meets this requirement.

ULNORM.COM : Click to view the full PDF of UL 858 2023

6.2 Accessibility of uninsulated live parts, film-coated wire, and moving parts

6.2.1 General

6.2.1.1 An opening in the enclosure shall comply with Accessibility of Uninsulated Live Parts and Film-Coated Wire, Section 6.2.2, and Accessibility of Moving Parts, Section 6.2.3.

6.2.1.2 A component such as a lampholder, fuseholder, circuit breaker, or the like that is intended to be user serviceable shall be located so that persons replacing or resetting the component cannot unintentionally touch an uninsulated live part as determined using the probe illustrated in Figure 6.1.

Exception: The requirement does not apply to the screwshell or center contact of a screwshell lampholder or to the clips of a fuseholder that is associated with the component being replaced.

ULNORM.COM : Click to view the full PDF of UL 858 2023

Figure 6.1

Articulate probe with web stop

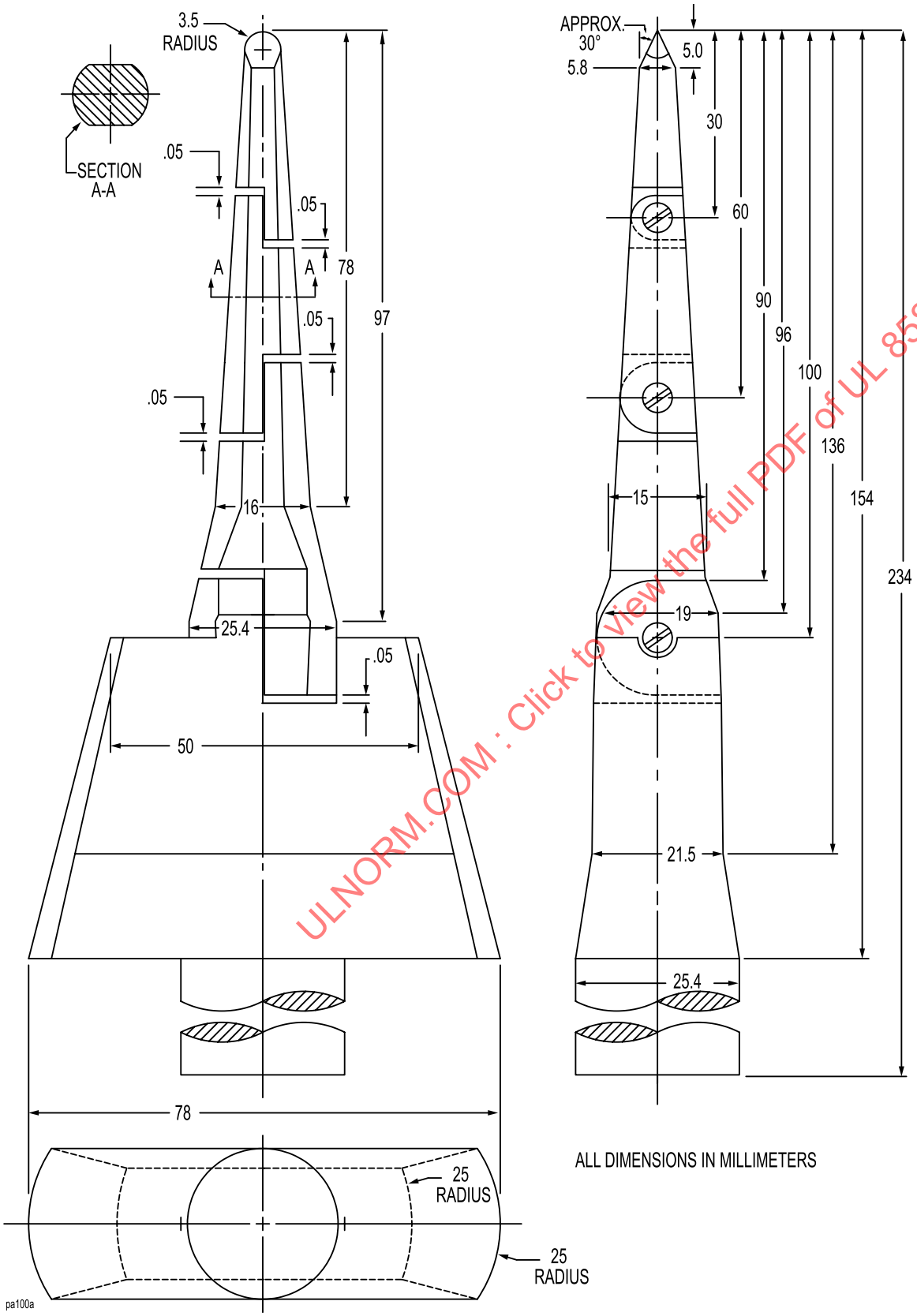

ULNORM.COM : Click to view the full PDF of UL 858 2023

6.2.1.3 During the examination of a product to determine compliance with 6.2.1.1, a part of the enclosure that may be opened or removed by a user without the use of a tool (for example, during use or normal cleaning, to attach an accessory, during insertion or removal of a plug-in module, to make an operating adjustment, or the like) is to be opened or removed. The normal cleaning operation is considered to involve any space available after removal of drip trays, drawers, filters, grease traps, covers, and similar parts.

6.2.1.4 A filter unit that is intended to be removed by the user for cleaning or replacement is to be removed when determining compliance with 6.2.1.1.

6.2.1.5 For examinations involving a probe, the probe is to be articulated into any configuration and may be rotated or angled to any position before, during, or after insertion into the opening; and the penetration may be to any depth allowed by the size of the opening, including minimal depth combined with maximum articulations. The probe shall not be used to determine the strength of a material. The probe is to be applied with the minimum force necessary to determine accessibility and shall not distort the enclosure material surrounding the opening in any way.

6.2.2 Accessibility of uninsulated live parts and film coated wire

6.2.2.1 An uninsulated live part or film coated wire shall not be exposed to unintentional contact during normal operation, normal cleaning, and insertion or removal of a plug-in module.

6.2.2.2 An opening in an enclosure shall comply with either (a), (b), or (c):

a) An opening that has a minor dimension less than 1 in (25.4 mm) shall be located so that an uninsulated live part or film-coated wire cannot be contacted by the probe illustrated in Figure 6.1. The minor dimension of an opening is the diameter of the largest cylindrical probe having a hemispherical tip that can be inserted through the opening to any depth.

Exception: For film-coated wire, an opening less than 1 in is acceptable if the probe illustrated in Figure 6.2 cannot contact the wire.

b) An opening that has a minor dimension greater than or equal to 1 in but no more than 6 in (152 mm) shall be located so that a part or wire is spaced from the opening as specified in Table 6.1.

c) An opening, when used as a protective cover for a downward facing open-wire / ribbon heating element such as a broil element, shall have a minor dimension of less than 0.10 in (2.54 mm).

ULNORM.COM : Click to view the full PDF of UL 858 2023

Figure 6.2

Probe for film-coated wire

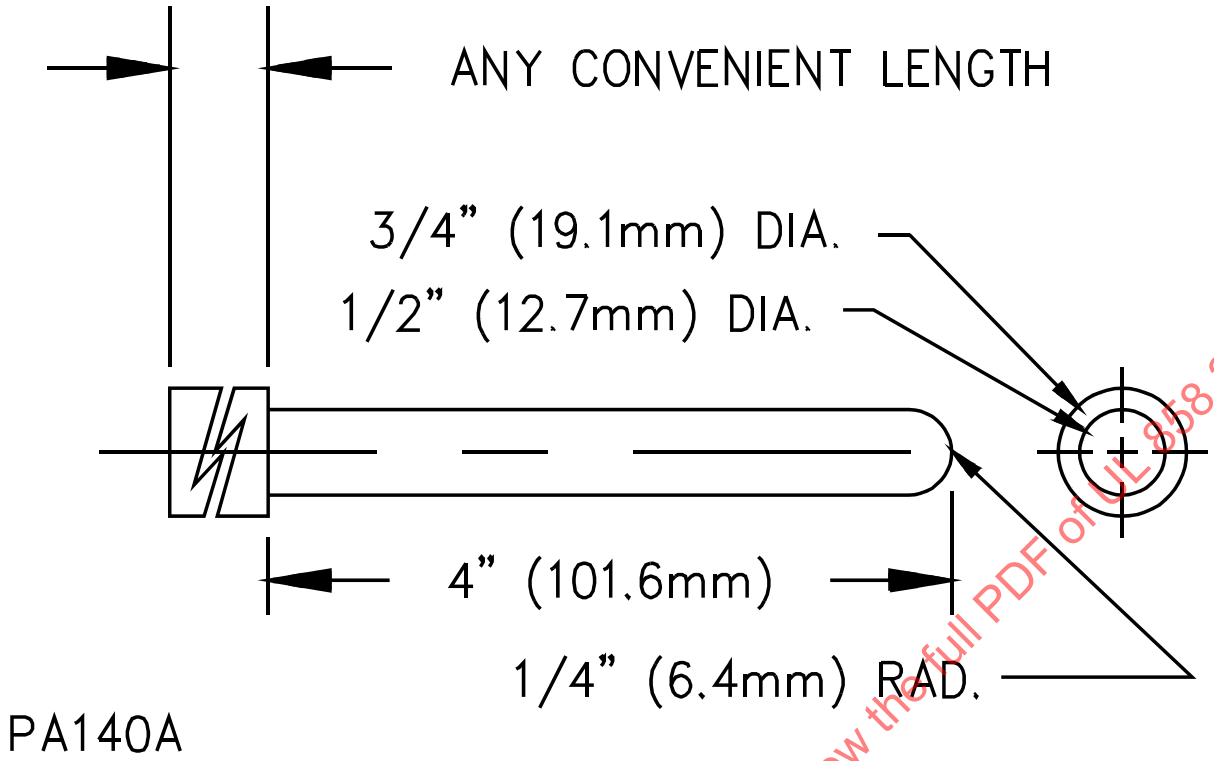

Table 6.1
Minimum acceptable distance from an opening to a moving part or a part that may involve a risk of electric shock

Minor dimension of opening[a]		Minimum distance from opening to part	
in[b]	(mm)	in[b]	(mm)
1	(25.4)	6-1/2	(165.0)
1-1/4	(31.8)	7-1/2	(190.0)
1-1/2	(38.1)	12-1/2	(318.0)
1-7/8	(47.6)	15-1/2	(394.0)
2-1/8	(54.0)	17-1/2	(444.0)
c		30	(762.0)

[a] The minor dimension of an opening is the diameter of the largest cylindrical probe having a hemispherical tip that can be inserted through the opening to any depth.

[b] Between 1 in and 2-1/8 in, interpolation is to be used to determine a value between values specified in the table.

[c] More than 2-1/8 in, but not more than 6 in (152.4 mm).

6.2.2.3 Terminals of heating elements, receptacles, and similar uninsulated live parts are to be considered live parts during normal cleaning – after removal of drip bowls, raising of top surfaces, or the like – unless such parts are disconnected by means of an air-gap switch with a marked off position or interlocking function. See 25.1.6.

ULNORM.COM : Click to view the full PDF of UL 858 2023

6.2.2.4 Terminals of a heating-element or module may be exposed during insertion and removal provided the ungrounded circuit lead or leads are disconnected by means of an air-gap switch with a marked off position or interlocking function.

6.2.2.5 Uninsulated live parts shall be secured to the base or mounting surface so that they will be prevented from turning or shifting in position, if such motion may result in a reduction of spacings below the minimum acceptable values specified in 26.1 – 26.3.

6.2.3 Accessibility of moving parts

6.2.3.1 Moving parts of an appliance shall, as far as practical considering the intended use of the appliance, be positioned or enclosed to reduce the likelihood of personal injury during normal use.

6.2.3.2 An opening in an enclosure shall comply with either (a) or (b):

a) An opening that has a minor dimension less than 1 in (25.4 mm) shall be located so that a moving part cannot be contacted by the probe illustrated in Figure 6.1. The minor dimension of an opening is the diameter of the largest cylindrical probe having a hemispherical tip that can be inserted through the opening to any depth. The examination with the probe is to be conducted with the moving parts adjusted to the most unfavorable position within their range of adjustment. If necessary, belts are to be removed.

b) An opening that has a minor dimension greater than or equal to 1 in but no more than 6 in (152 mm) shall be located so that a moving part is spaced from the opening as specified in Table 6.1.

6.3 Expulsion of molten metal and burning insulation

6.3.1 General

6.3.1.1 Openings in the enclosure of an appliance shall be located and constructed so that burning insulation, molten metal, flaming particles, or the like are not expelled from the enclosure.

6.3.1.2 Openings in an enclosure, unless constructed as specified in Openings in Vertical Surfaces, Section 6.3.2, or Openings in Horizontal Surfaces, Section 6.3.3, shall not be located below live parts or internal wiring.

Exception No. 1: Openings in the enclosure of a component fan or blower assembly may be judged in accordance with the applicable requirements in the Standard for Electric Fans, UL 507, provided that the fan or blower circuit is protected by a branch circuit-type fuse or circuit breaker rated no more than 20 A.

Exception No. 2: Opening in horizontal surfaces below live parts, opening into an oven cavity, are acceptable with a maximum minor dimensions as defined in 6.2.2.2(c).

6.3.1.3 An internal barrier, provided to comply with 6.3.2.1 or 6.3.3.1, shall be constructed of materials that are acceptable for use as an enclosure as specified in 6.1.2 or shall comply with the applicable requirements for internal barriers in the Standard for Polymeric Materials – Use in Electrical Equipment Evaluations, UL 746C.

6.3.2 Openings in vertical surfaces

6.3.2.1 An opening in a surface that is 45 degrees or less from vertical shall be provided with a louver, baffle, barrier, or the like, that is shaped or located to prevent the expulsion of burning insulation, molten metal, and the like from the enclosure. See Figure 6.3 for examples of constructions that comply with this

ULNORM.COM : Click to view the full PDF of UL 858 2023

requirement. An opening in the surface of an enclosure that is located above the highest plane that contains one or more live parts or internal wiring is considered to comply with this requirement.

Exception: Openings required for a manufacturing operation such as drainage of paint, production-line adjustment, or calibration of components may be provided in a vertical surface without a louver, baffle, or barrier if:

a) No single opening has a dimension more than 5/16 in (7.9 mm), and

b) The total area of all such openings in any 1-ft^2 area does not exceed 1 in^2 (645 mm^2).

Figure 6.3

Examples of openings in vertical surfaces that comply with 6.3.2.1

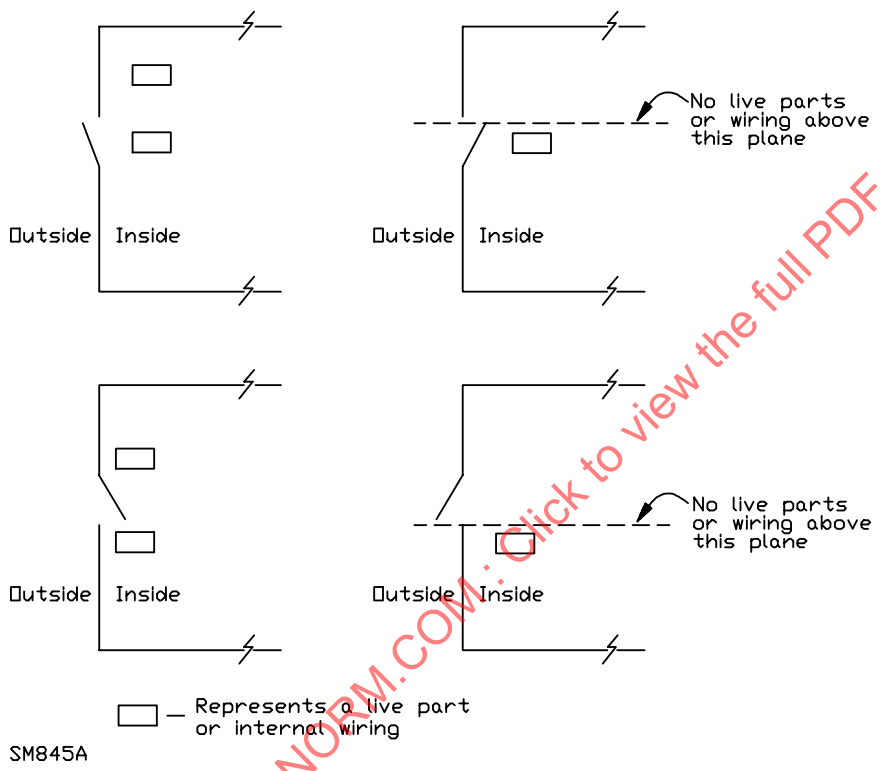

ULNORM.COM : Click to view the full PDF of UL 858 2023

6.3.3 Openings in horizontal surfaces

6.3.3.1 An opening in a surface that is more than 45 degrees from vertical, and that is located at or below any horizontal plane that contains internal wiring or live parts, shall comply with 6.3.3.2 – 6.3.3.3.

6.3.3.2 An opening as described in 6.3.3.1 shall be provided with one or more baffles, barriers or other obstructions of such dimensions and locations that any path from live parts or internal wiring through the opening requires at least one change in direction from a straight line. If the minor dimension of such an opening is larger than 1/4 in (6.4 mm), the opening shall be provided with a perforated sheet or screen with openings having a minor dimension no larger than 1/4 in. See Figure 6.4.

Figure 6.4

Example of an acceptable opening

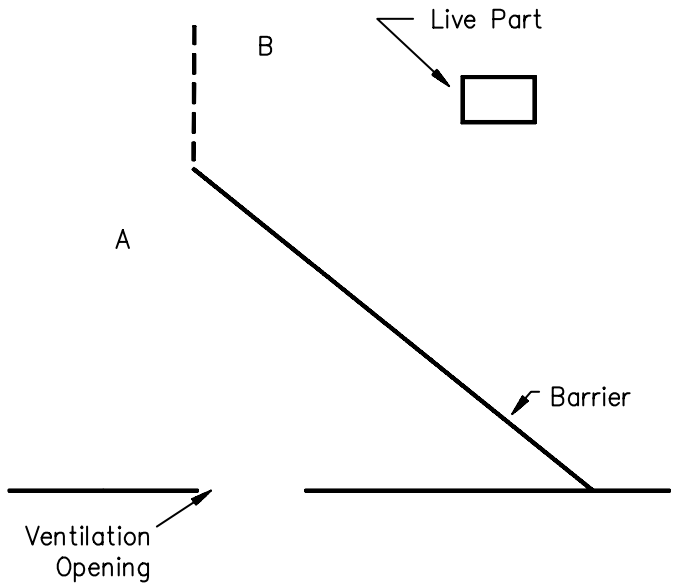

A – No live parts permitted in this area.
B – Live parts acceptable this side of barrier.

S2143E

6.3.3.3 A perforated sheet or screen provided in accordance with 6.3.3.2 shall be constructed of a material having a thickness not less than the thickness required for an enclosure of live parts.

6.4 Protection against spillage and cooking vapors

6.4.1 A live part of an appliance shall be located or enclosed so that it will not be exposed to vapors from an oven cavity of the appliance. The part shall also be located or enclosed so that it is protected against spillage and accumulations of spillage.

Exception: An open-wire / ribbon heating element used in a downward facing application such as a broil element is acceptable where exposed to oil-laden air and vapors when:

a) The element complies with Heating Elements, Section 18.

b) The element employs a mesh that complies with Frame and Enclosures, Section 6; with an exception to 6.1.4.

c) The element complies with all applicable tests in Tests for Elements Exposed to Oil-laden Air and Oven Vapors, Moisture and Grease, Section 72.6.

6.4.2 A control that is mounted in a surface that is more than 45 degrees from vertical, and that is mounted in or adjacent to a cooking surface and therefore subject to spillage shall comply with Spillage on Horizontally Mounted Controls, Section 75.1.

ULNORM.COM : Click to view the full PDF of UL 858 2023

6.4.3 An appliance provided with a collecting surface beneath the cooking surface that is sealed or that does not otherwise allow for user access for cleaning of spillage, shall comply with Spillage on Sealed Cooktops, Section 75.3.

6.4.4 An appliance cooktop employing a seal or gasket to prevent live parts or internal wiring from being exposed to spillage or the accumulations of spillage shall comply with Aging of Cooktop Seals and Gaskets, Section 75.4.

6.4.5 An appliance cooktop having any vents, slots, or openings on or near the horizontal cooking surface and therefore subject to spillage shall comply with the Spillage on vents, slots, or openings, Section 75.5.

6.4.6 An appliance intended for under counter installation, such as a built-in oven, that may be subject to spillage of liquids from the above countertop or cooking surface shall comply with the Spillage on under counter appliances, Section 75.6.

7 Assembly

7.1 A switch, a lampholder, an attachment-plug receptacle, or similar component shall be mounted securely and shall be prevented from turning. See 7.2.

Exception No. 1: A switch if all four of the following conditions are met:

a) The switch is of a plunger or other type that does not tend to rotate when operated – a toggle switch is considered to be subject to forces that tend to turn the switch during normal operation of the switch.

b) The means of mounting the switch makes it unlikely that operation of the switch will loosen it.

c) The spacings are not reduced below the minimum acceptable values if the switch rotates.

d) Normal operation of the switch is by mechanical means rather than by direct contact by persons.

Exception No. 2: A lampholder of the type in which the lamp cannot be replaced, such as a neon pilot or indicator light in which the lamp is sealed in by a nonrenewable jewel if rotation cannot reduce spacings below the minimum acceptable values.

7.2 The means by which the turning mentioned in 7.1 is prevented is to include more than friction between surfaces – for example, a properly applied lock washer is acceptable as a means to prevent turning of a device having a single-hole mounting means.

7.3 In an appliance provided with a panel or assembly that is moved in making or inspecting power-supply connections or is moved in packaging for shipment, a concentrated stress shall not be transmitted to the internal wiring connections when the panel or assembly is not secured in its intended position, and the internal wiring and the capillary tube of a thermostat shall not be crushed or kinked with the panel or assembly in any position.

7.4 The construction and intended method of installation of a counter-mounted cooking unit shall be such that, if the rough-in box and parts attached thereto become partially detached from the remainder of the assembly, a stress will not be transmitted to internal wiring connections.

7.5 An oven door of a range or wall-mounted oven that can be removed and replaced with or without the use of simple hand tools may be shipped separately provided:

ULNORM.COM : Click to view the full PDF of UL 858 2023

a) The door is self-aligning during replacement, or the construction is such that alignment of the door is not necessary, and

b) Instructions for removing and replacing the door are provided.

7.6 A top surface of a counter-mounted cooking unit and the remainder of the unit may be shipped separately provided:

a) The units are marked in accordance with 83.7,

b) No electrical components are mounted on the top surface except:

1) Heating elements,

2) Leads factory connected to the heating elements, and

3) Receptacles provided for plug-in heating elements,

c) No insulated or uninsulated live parts or internal wiring are exposed on the remainder of the unit, and

d) The separate parts may be assembled without the necessity of flexing the heating element leads to an extent greater than that encountered in normal use and cleaning.

8 Protection Against Corrosion

8.1 All surfaces of sheet steel used for casing, backing, or support of electrical components shall be protected against corrosion by enameling, painting, galvanizing, anodizing, plating, or equivalent means.

Exception: Sheet steel with porcelain enamel applied only on the outside is acceptable.

9 Power-Supply Connections

9.1 General

9.1.1 With reference to Power-Supply Connections, Section 9, an appliance that incorporates a factory-installed feature or provision for a field-installed feature that is intended to be attached to the building structure is to be judged as an appliance that is attached to the building structure and shall have provisions for permanent attachment to the power supply. A slide-in type of range provided with trim strips to cover the opening between the range and the counter is not considered to be attached to the building structure.

Exception: An appliance intended to be built-in, by attachment to cabinetry, and rated 120 V, 1.75 kW (14.6 A) or less, may employ a flexible cord and attachment plug for connection to the power supply. Such an appliance shall not connect to external exhaust / ventilation connections.

9.1.2 An appliance that is intended for both permanent wiring and cord connection shall comply with the enclosure requirements in Frame and Enclosure, Section 6, under conditions of each intended supply connection configuration.

9.1.3 The requirements in 9.2.1.1 – 9.2.3.29 apply to all appliances, except those appliances that are intended to be connected to the power supply only through a factory-installed power supply cord.

9.1.4 An appliance provided with casters shall only be cord-connected and comply with Cord-Connected Appliances, Section 9.3.

ULNORM.COM : Click to view the full PDF of UL 858 2023

9.2 Permanently connected appliances

9.2.1 General

9.2.1.1 An appliance intended for permanent connection to the power supply shall have provision for connection of a wiring system.

Exception: Leads provided for power-supply connection of an appliance may be brought out through factory-attached flexible conduit 3 – 6 ft (0.91 – 1.80 m) long. An outlet box or conduit fitting shall be provided at the free end of the conduit, or the conductor insulation at the free end of the conduit shall be protected from the sharp edges of the conduit during shipping by means of a tape wrap, a fiber bushing secured in place, or the equivalent.

9.2.2 Outlet or terminal boxes

9.2.2.1 An outlet or terminal box shall have sufficient volume to accommodate the intended wiring. A trial installation is to be made using wires of the size indicated in 9.2.3.2 and 9.2.3.3 and conduit and fittings sized for the wire in accordance with the National Electrical Code, ANSI/NFPA 70.

9.2.2.2 A terminal block intended for field connection of power-supply conductors shall be rated for connection to both copper and aluminum conductors.

9.2.2.3 Other than as noted in 9.2.2.4, an outlet or terminal box mounted integrally with a permanently connected cabinet-supported, wall-mounted, or counter-mounted appliance shall be located so that the power-supply connections can be inspected without moving the appliance to the extent that it will not be supported by the building structure only.

9.2.2.4 An outlet or terminal box mounted integrally with a counter-mounted cooking unit of the insert type shall be located so that the power-supply connections can be inspected without moving the assembly after it has been installed as intended.

9.2.2.5 An outlet or terminal box intended for power-supply connection and mounted integrally with the appliance shall be prevented from turning with respect to the appliance.

9.2.3 Wiring terminals and leads

9.2.3.1 A wiring terminal or lead is that terminal or lead to which a power-supply or equipment-grounding connection will be made in the field when the appliance is installed.

9.2.3.2 Wiring terminals intended for permanent connection to the power supply shall be rated for connection of conductors having an ampacity in accordance with the National Electrical Code, ANSI/NFPA 70, and the rating of the appliance, except that the National Electrical Code demand load is able to be applied only to a range.

9.2.3.3 Leads provided for permanent connection to the power supply shall be equal to or one standard size smaller – see Table 310-16 of the National Electrical Code, ANSI/NFPA 70 for standard sizes – than the required copper conductor size as determined in accordance with the National Electrical Code. See Table 9.1 for the minimum acceptable size of leads for an appliance rated 120/240 V, 3-wire; and Table 9.2 for the minimum acceptable size of leads for an appliance rated 120/208 V, 3-wire.

ULNORM.COM : Click to view the full PDF of UL 858 2023

Table 9.1
Size of conductors for 120 / 240 V, 3-wire appliances

Appliance rating, W	Minimum conductor size, AWG		
	Ungrounded conductor L1 and L2	Neutral conductor	Grounding conductor
Wall-mounted and counter-mounted cooking units			
0 – 3,600	16	16	16
3,601 – 4,800	16	16	16
4,801 – 5,150	14	16	14
5,151 – 6,850	12	16	12
6,851 – 7,200	12	14	12
7,201 – 9,600	10	12	10
9,601 – 10,300	8	12	10
10,301 – 13,200	8	10	10
13,201 – 13,700	6	10	10
13,701 – 14,400	6	8	10
14,401 – 16,800	6	8	8
16,801 – 18,850	4	8	8
18,851 – 19,200	4	6	8
19,201 – 22,800	3	6	8
22,801 – 24,000	2	6	8
24,001 – 26,400	2	4	6
Ranges			
0 – 3,600	16	16	14
3,601 – 4,500	16	16	12
4,501 – 4,800	14	16	12
4,801 – 6,000	14	16	10
6,001 – 6,425	12	16	10
6,426 – 8,749	12	12	10
8,750 – 14,500	10	12	10
14,501 – 16,500	10	10	10
16,501 – 24,000	8	10	8
24,001 – 25,500	8	10	6
25,501 – 26,500	6	10	6
26,501 – 27,000	6	8	6

ULNORM.COM : Click to view the full PDF of UL 858 2023

Table 9.2
Size of conductors for 120 / 208 V, 3-wire appliances

Appliance rating, W	Minimum conductor size, AWG		
	Ungrounded conductor L1 and L2	Neutral conductor	Grounding conductor
Wall-mounted and counter-mounted cooking units			
0 – 3,120	16	16	16
3,121 – 4,160	16	16	16
4,161 – 4,450	14	16	14
4,451 – 5,940	12	16	12
5,941 – 6,240	12	14	12
6,241 – 8,320	10	12	10
8,321 – 8,900	8	12	10
8,901 – 11,440	8	10	10
11,441 – 11,900	6	10	10
11,901 – 12,500	6	8	10
12,501 – 14,560	6	8	8
14,561 – 16,350	4	8	8
16,351 – 16,640	4	6	8
16,641 – 19,760	3	6	8
19,761 – 20,800	2	6	8
20,801 – 22,880	2	4	6
22,881 – 23,800	1	4	6
23,801 – 26,000	1	3	6
Ranges			
0 – 3,120	16	16	14
3,121 – 3,900	16	16	12
3,901 – 4,160	14	16	12
4,161 – 5,200	14	16	10
5,201 – 5,570	12	16	10
5,571 – 7,430	12	14	10
7,431 – 7,800	12	12	10
7,801 – 12,500	10	12	10
12,501 – 14,500	8	12	10
14,501 – 20,500	8	10	8
20,501 – 20,800	6	10	8
20,801 – 21,500	6	10	6
21,501 – 27,000	6	8	6

ULNORM.COM : Click to view the full PDF of UL 858 2023

9.2.3.4 A wiring terminal shall be provided with a soldering lug or pressure terminal connector, firmly bolted or held by a screw.

Exception: A wire-binding screw or stud may be employed at a wiring terminal intended to accommodate a 10 AWG or smaller conductor if upturned lugs or the equivalent are provided to hold the wire in position. See 9.2.3.5.

9.2.3.5 The provision of a wire-binding screw or stud for one terminal and pressure wire connectors for the remaining terminals is not acceptable.

9.2.3.6 A wire-binding screw or stud employed at a wiring terminal shall be 10 or larger.

Exception: A 8 screw or stud may be used at a terminal intended for connection of a 14 AWG conductor only. The screw or stud shall not have more than 32 threads per inch (25.4 mm). See 9.2.3.7.

9.2.3.7 It should be noted that 14 AWG is the smallest conductor that is acceptable for branch-circuit wiring, and thus is the smallest conductor anticipated at a terminal for connection of a power-supply wire.

9.2.3.8 A wire-binding screw employed at a wiring terminal shall thread into a metal terminal plate not less than 0.050 in (1.27 mm) thick, and there shall not be fewer than two full threads in the metal.

9.2.3.9 A terminal plate formed from stock having the minimum acceptable thickness specified in 9.2.3.8 may have the metal extruded at the tapped hole to provide the two full threads for the binding screw.

9.2.3.10 A wire-binding screw or stud shall employ upturned lugs or a cupped washer that will retain a conductor of the size mentioned in 9.2.3.4 – but not smaller than 14 AWG – under the head of the screw, nut, or washer.

9.2.3.11 The free length of a lead inside an outlet box or wiring compartment, or extending beyond the end of the flexible conduit provided in accordance with the Exception to 9.2.1.1 shall be 6 in (152 mm) or more.

9.2.3.12 A wiring terminal shall be securely and rigidly mounted, and shall be prevented from turning or shifting in position by means other than friction between surfaces.

9.2.3.13 The requirement in 9.2.3.12 is intended primarily to provide for the maintenance of spacings, as specified in Spacings, Section 26. Consideration is also to be given to the means for locking terminals in position to maintain tightness.

9.2.3.14 A pressure wire connector provided at a wiring terminal shall be prevented from turning so as to reduce spacings to values less than the minimum acceptable specified in Spacings, Section 26, except that, if such minimum or larger spacings are maintained with connectors turned 30 degrees toward each other or toward other metal parts, no means to prevent turning need be provided.

9.2.3.15 A permanently connected appliance rated 125 V or less, 125/250 V or less, 3-wire, 120/208 V, and employing a screw-shell lampholder or a single-pole switch other than an automatic control without a marked off position shall have one field-wiring terminal or lead identified for the connection of the grounded conductor of the supply circuit.

9.2.3.16 A terminal intended for the connection of a grounded power-supply conductor shall be of or plated with a metal substantially white in color, and shall be readily distinguishable from the other terminals, or proper identification of that terminal shall be clearly shown in some other manner, such as on an attached wiring diagram.

9.2.3.17 A lead intended to be connected to a grounded power-supply conductor shall be finished to show a white or gray color, and shall be readily distinguishable from the other leads.

9.2.3.18 A lead provided for field connection to accomplish equipment grounding shall be bare, or shall be finished to show a green color with or without one or more yellow stripes. No other lead intended for field connection shall be so identified.

9.2.3.19 A wire-binding screw intended for the connection of an equipment-grounding conductor shall have a green-colored head that is hexagonal, slotted, or cross-recessed; and upturned lugs or the

ULNORM.COM : Click to view the full PDF of UL 858 2023

equivalent shall be employed to retain the conductor. A pressure wire connector intended for the connection shall be marked in accordance with 82.7. The wire-binding screw or pressure wire connector shall be located so that it does not require removal during normal servicing of the appliance. A sheet-metal screw shall not be used for connection of an equipment-grounding conductor.

9.2.3.20 The wiring-terminal compartment of a wall-mounted oven or a counter-mounted cooking unit may include supplementary terminals for parallel connection of associated units, provided the terminal compartment is constructed so that the field-connected wiring system from the associated units and from the source of supply may be connected thereto. Connections to the source of supply may be provided in accordance with the Exception to 9.2.1.1.

9.2.3.21 The supplementary terminals mentioned in 9.2.3.20 are considered to be field-wiring terminals and, as such, all requirements regarding size, spacing, and the like for wiring terminals shall apply thereto.

9.2.3.22 The main wiring terminals mentioned in 9.2.3.20 shall be capable of securing conductors of sizes having ampacities that, according to the rating of the main and each associated unit and the National Electrical Code, ANSI/NFPA 70 demand load, are rated for supplying both the main and each associated unit as well as for supplying the main unit only. See 80.5, 82.2, and 82.21.

9.2.3.23 An opening in a wiring compartment for the connection to the power supply in the field, whether in the form of a knockout or an open hole, shall:

a) Have the minimum width of flat surface surrounding the opening as specified in Table 9.5 or

b) Be acceptable when the Test Gauge for Flat Surfaces Surrounding Knockout is applied as specified in the Standard for Metallic Outlet Boxes, UL 514A.

9.2.3.24 For an appliance that is intended to be connected to the power supply only by means of permanent wiring brought into the appliance, the knockout or opening in the wiring compartment for connection in the field shall be sized in accordance with the "Permanent Wiring Connection" column in Table 9.3 or Table 9.4, as applicable. See 82.10.

ULNORM.COM : Click to view the full PDF of UL 858 2023

Table 9.3
Range connection opening sizes

Range rating, W		Diameter of connection opening, in (mm)											
		Permanent wiring connection						Cord set, cord-kit connection					
120/240 V 3-wire	120/208 V 3-wire	Minimum		Nominal		Maximum		Minimum		Nominal		Maximum	
0 – 8,749	0 – 7,800	0.860	(21.84)	7/8	(22.23)	0.906	(23.01)	1.094	(27.79)	1-1/8	(28.58)	1.140	(28.96)
8,750 – 16,500	7,801 – 12,500	1.094	(27.79)	1-1/8	(28.58)	1.140	(28.96)	1.360	(34.54)	1-3/8	(34.93)	1.406	(35.71)
16,501 – 22,500	12,501– 18,500	1.360	(34.54)	1-3/8	(34.93)	1.406	(35.71)	1.719	(43.66)	1-3/4	(44.45)[a]	1.765	(44.83)
22,501 – 25,500	18,501 – 20,500	1.360	(34.54)	1-3/8	(34.93)	1.406	(35.71)	–		–		–	
25,501 – 27,000	20,501 – 27,000	1.719	(43.66)	1-3/4	(44.45)	1.765	(44.83)	–		–		–	

[a] The connection opening may be reduced to a nominal 1-3/8 in diameter if the installation instructions provided with the appliance indicate that the appliance is to be connected using a power-supply-cord kit marked for use with a 1-3/8 in diameter opening.

ULNORM.COM : Click to view the full PDF of UL 858 2023

Table 9.4
Wall- or counter-mounted cooking unit connection opening sizes

Range rating, W		Diameter of connection opening, in (mm)											
		Permanent wiring connection						Cord set, cord-kit connection					
120/240 V 3-wire	120/208 V 3-wire	Minimum		Nominal		Maximum		Minimum		Nominal		Maximum	
0 – 7,200	0 – 6,240	0.860	(21.84)	7/8	(22.23)	0.906	(23.01)	1.094	(27.79)	1-1/8	(28.58)	1.140	(28.96)
7,201 – 9,600	6,241 – 8,320	1.094	(27.79)	1-1/8	(28.58)	1.140	(28.96)	1.360	(34.54)	1-3/8	(34.93)	1.406	(35.71)
9,601 – 12,000	8,321 – 10,400	1.360	(34.54)	1-3/8	(34.93)	1.406	(35.71)	1.719	(43.66)	1-3/4	(44.45)[a]	1.765	(44.83)
12,001 – 13,200	10,401 – 11,440	1.360	(34.54)	1-3/8	(34.93)	1.406	(35.71)	–		–		–	
13,201 – 19,200	11,441 – 16,640	1.719	(43.66)	1-3/4	(44.45)	1.765	(44.83)	–		–		–	
19,201 – 22,800	16,641 – 19,760	1.958	(49.73)	2	(50.8)	2.015	(51.18)	–		–		–	
22,801 – 26,400	19,761 – 26,000	2.433	(61.72)	2-1/2	(63.5)	2.500	(63.5)	–		–		–	

[a] The connection opening may be reduced to a nominal 1-3/8 in diameter if the installation instructions provided with the appliance indicate that the appliance is to be connected using a power-supply-cord kit marked for use with a 1-3/8 in diameter opening.

ULNORM.COM : Click to view the full PDF of UL 858 2023

Table 9.5
Sizes of flat surfaces surrounding connection openings

Nominal diameter of opening,		Corresponding trade size of conduit,	Minimum width of flat surface surrounding opening,	
in	(mm)	in	in	(mm)
0.875	(22.23)	1/2	0.133	(3.38)
1.109	(28.17)	3/4	0.156	(3.96)
1-3/8	(34.93)	1	0.198	(5.03)
1-3/4	(44.04)	1-1/4	0.274	(6.96)
2	(50.39)	1-1/2	0.315	(8.00)
2-1/2	(62.71)	2	0.353	(8.97)

9.2.3.25 An appliance that is intended to be connected to the power supply by means of either permanent wiring brought into the appliance or a power-supply cord kit shall be provided with:

a) Two knockouts (concentric or eccentric);

b) An opening inside a knockout; or

c) A reducing fitting in an opening.

The smaller knockout or opening, or the opening in the reducing fitting, shall be sized in accordance with the "Permanent wiring connection" column in Table 9.3 or Table 9.4, as applicable. The larger knockout, or the opening in which the reducing fitting is mounted, shall be sized in accordance with the "Cord-kit connection" column in Table 9.3 or Table 9.4, as applicable.

9.2.3.26 A knockout shall comply with the requirements in the Knockout Test, Section 65.

9.2.3.27 Concentric and eccentric knockouts shall be constructed so that any size knockout may be removed without disturbing the next larger size provided.

9.2.3.28 A compartment shall be provided to enclose field supply-wiring connections. The minimum free space for each conductor, other than an equipment grounding conductor, in the compartment shall not be less than specified in Table 9.6. Each conductor that originates outside the compartment and terminates inside the compartment is to be counted as one conductor. When determining the available free space within a compartment, the volume of any equipment grounding conductor, clamp, connector, or the like is to be deducted.

ULNORM.COM : Click to view the full PDF of UL 858 2023

Table 9.6
Size of field-wiring compartment

Size of conductor		Minimum free space within compartment for each conductor	
AWG	(mm^2)	in^3	(cm^3)
18	(0.82)	1.5	(24.6)
16	(1.3)	1.75	(28.7)
14	(2.1)	2	(32.8)
12	(3.3)	2.25	(36.9)

Table 9.6 Continued on Next Page

Table 9.6 Continued

Size of conductor		Minimum free space within compartment for each conductor	
AWG	(mm^2)	in^3	(cm^3)
10	(5.3)	2.5	(41.0)
8	(8.4)	3	(49.2)
6	(13.3)	5	(81.9)

9.2.3.29 The distance between a pressure terminal connector intended for field wiring and the wall of an enclosure toward which the conductor is directed or through which the conductor may normally pass shall be as specified in Table 9.7.

Exception: Spacings may be less where a wall or obstruction lies outside the area occupied by a conductor that is bent or deflected to a radius not less than the distance specified in Table 9.7.

Table 9.7
Wire-bending space

Size of wire			Minimum bending space, terminal to wall			
			1 wire per pole		2 wires per pole[a]	
AWG or kcmil (mm^2)			in	(mm)	in	(mm)
14 – 10	AWG	(2.1 – 5.3)	Not specified		–	–
8 – 6	AWG	(8.4 – 13.3)	1-1/2	(38.1)	–	–
4 – 3	AWG	(21.2 – 26.7)	2	(50.8)	–	–
2	AWG	(33.6)	2-1/2	(63.5)	–	–
1	AWG	(42.4)	3	(76.2)	–	–
1/0 – 2/0	AWG	(53.5 – 67.4)	3-1/2	(88.9)	5	(127)
3/0 – 4/0	AWG	(85.0 – 107.2)	4	(102)	6	(152)
250	kcmil	(127)	4-1/2	(114)	6	(152)

[a] Applies to two conductors that are only able to approach a terminal from the same direction.

9.3 Cord-connected appliances

9.3.1 General

9.3.1.1 The requirements in 9.3.1.2 – 9.3.2.2 apply only to those appliances on which a factory-connected flexible cord is provided.

9.3.1.2 A range, a wall-mounted oven, a counter-mounted cooking unit, or a combination thereof that is not intended to be attached to the building structure – see 9.1.1 – may be provided with a power-supply cord for external connections.

9.3.1.3 A flexible cord shall be Type SRD, SRDT, S, SO, or ST.

Exception: A flexible cord provided with a wall-mounted oven or counter-mounted cooking unit or an appliance intended to be built-in as noted in the exception to 9.1.1, may be Type SJ, SJO, or SJT.

9.3.1.4 A cord set or power supply cord shall comply with the Standard for Cord Sets and Power-Supply Cords, UL 817.

ULNORM.COM : Click to view the full PDF of UL 858 2023

9.3.1.5 A flexible cord provided with a wall-mounted oven or counter-mounted cooking unit shall have a temperature rating not less than the temperature of any surface that it is likely to contact. See 59.5.1.2 and 59.5.1.4.

9.3.1.6 A grounding lead of a flexible cord shall have a green color, with or without one or more yellow stripes, and no other lead shall be so identified.

9.3.1.7 A flexible cord and an attachment plug shall have a voltage rating not less than the rated voltage of the appliance, and shall have an ampacity in accordance with the rating of the appliance, except that the National Electrical Code, ANSI/NFPA 70 demand load is able to be applied only to a range. See 9.2.3.29.

9.3.1.8 Attachment plugs, receptacles, appliance couplers, appliance inlets (motor attachment plugs), and appliance (flatiron) plugs, shall comply with the Standard for Attachment Plugs and Receptacles, UL 498.

Exception: Attachment plugs and appliance couplers integral to cord sets or power supply cords that are investigated in accordance with the Standard for Cord Sets and Power-Supply Cords, UL 817, are not required to comply with UL 498.

9.3.1.9 Female devices (such as receptacles, appliance couplers, and connectors) that are intended, or that may be used, to interrupt current in the end product, shall be suitably rated for current interruption of the specific type of load, when evaluated with its mating plug or connector. For example, an appliance coupler that can be used to interrupt the current of a motor load shall have a suitable horsepower rating when tested with its mating plug.

9.3.1.10 For an appliance rated 120 V, 1.75 kW (14.6 A) or less, the size of the conductors of the flexible cord shall be based on the current rating of the appliance, and shall be in accordance with Table 9.8.

Table 9.8
Cord conductor size for appliances rated 120 V, 1.75 kW or less

Cord conductor size, AWG	Maximum current rating of appliance, A	
	Attachment plug connection crimped only	Attachment plug connection soldered, brazed, or welded[a]
18	8	10
16	10.4	13
14	14.4	14.6

NOTE – This table limits the appliance current on the basis of cord conductor size and type of connection between the cord conductors and blades of the attachment plug. For current limitation based on the attachment plug rating, see 9.3.1.11. For appliances rated in watts rather than amperes, the limitation shall be based on the equivalent current rating calculated using the supply voltage specified in 56.4.

[a] A soldered connection shall be mechanically secured before being soldered. A soldered connection that is crimped before being soldered is considered to be mechanically secured before soldering. A brazed or welded connection may additionally be mechanically secured before brazing or welding.

9.3.1.11 For an appliance rated 120 V, 1.75 kW (14.6 A) or less, the current rating of the attachment plug shall not be less than 125 percent of the current rating of the appliance.

9.3.1.12 The length of a flexible cord and attachment-plug assembly provided on an appliance shall not be less than 3 ft (0.91 m) nor more than 6 ft (1.83 m) measured from the face of the attachment plug to the point of entry into the appliance.

ULNORM.COM : Click to view the full PDF of UL 858 2023

Exception: The length of external flexible cord and attachment-plug assembly provided on an appliance intended to be built-in, attached to the cabinetry and rated 120 V, 1.75 kW (14.6 A) or less, shall not be less than 3.0 (0. 91 m) nor more than 6 ft (1.82 m) in length.

9.3.1.13 The edges of the opening in the enclosure in which the power-supply cord strain relief is mounted, and the edges of an opening in a strain relief, bushing, fitting, or the like through which the power-supply cord passes, shall be smooth and free from burrs, fins, projections, sharp edges, and the like that may damage the insulation of the cord. The opening in which the power-supply cord strain relief is mounted shall be sized in accordance with the "Cord-kit connection" column in Table 9.3 or Table 9.4, as applicable.

Exception: The requirements regarding the opening size do not apply if the appliance is:

a) Provided with the instructions described in 86.12, or

b) Constructed in accordance with the Exception to 16.1.1.

9.3.2 Strain relief

9.3.2.1 Strain relief shall be provided at the enclosure so that mechanical stress on a flexible cord is not transmitted to terminals, splices, or internal wiring. See Section 64.

9.3.2.2 Means shall be provided to prevent the flexible cord from being pushed into the enclosure through the cord-entry hole if:

a) Such displacement is likely to subject the cord to mechanical damage or to expose the cord to a temperature higher than that for which it is acceptable, or

b) It is likely to reduce spacings, such as to a metal strain-relief clamp, below the minimum acceptable values.

9.3.2.3 Insulating bushings serving as strain relief shall comply with the Standard for Insulating Bushings, UL 635. Tests specified in this Standard (e.g. Strain Relief Test) may still need to be performed to confirm the combination of the insulating bushing and the supporting parts are suitable.

10 Internal Wiring

10.1 The wiring and connections between parts of an appliance shall be protected or enclosed, except that a power-supply cord may be employed on a range, a wall-mounted oven, a counter-mounted cooking unit, or a combination thereof for external connections.

10.2 The protection mentioned in 10.1 shall include a complete enclosure for all ungrounded internal supply leads directly connected to the branch-circuit supply leads, and for other unswitched internal wiring that would otherwise be exposed during normal cleaning after removal of drip pans, raising of top surfaces, or the like.

10.3 A length of jacketed flexible cord specified in the Exception to 9.3.1.3 may be employed for external connections between parts of an appliance if flexibility is essential.

10.4 With regard to enclosure of internal wiring, the protection of wiring specified in 10.2 is considered to exist if, when considered as if it were film-coated wire, the construction complies with 6.2.2.1.

ULNORM.COM : Click to view the full PDF of UL 858 2023

10.5 Wires within an enclosure, compartment, raceway, or the like shall be disposed or protected so that no damage to conductor insulation can result from contact with any rough, sharp, or moving part such as a drawer, drip tray, door, etc., or from any utensil placed in a drawer or storage compartment.

10.6 Internal wiring shall not be located directly above a filter opening, although well-routed internal wiring may be visible through the opening when the filter units are removed.

Exception: This requirement does not apply to the leads to a blower motor.

10.7 The insulation on a conductor shall be acceptable for the voltage and temperature to which it is subjected during normal operation.

10.8 Internal wiring composed of insulated conductors shall comply with the Standard for Appliance Wiring Material, UL 758 and shall have a flame rating of VW1.

Exception No. 1: Insulated conductors need not comply with UL 758 if they comply with one of the following:

a) The Standard for Thermoset-Insulated Wires and Cables, UL 44;

b) The Standard for Thermoplastic-Insulated Wires and Cables, UL 83; or

c) The applicable UL standard for other insulated conductor types specified in Wiring Methods and Materials, of the National Electrical Code, NFPA 70.

Exception No. 2: Insulated conductors for specialty applications (e.g. data processing or communications) and located in a low-voltage circuit not involving the risk of fire, electric shock, or injury to persons need not comply with UL 758.

Exception No. 3: Wiring in the appliance does not need to be VW-1 if all of the following criteria are met:

a) Wire insulation consists of silicone or inorganic materials with glass or aramid braid fiberous covering. [For reference, examples UL Style 3251, 3257, 5420]

b) Conductors shall be stranded copper wire having a 600 Vac minimum insulation rating for high voltage circuits and having a 300 Vac insulation rating for low voltage circuits. Maximum current rating would be based on Table 10.1.

c) The product is compliant to 77A for all electrical connections that involve internal wire not rated VW-1.

ULNORM.COM : Click to view the full PDF of UL 858 2023

Table 10.1
Maximum Current Based on Wire Size

Wire size		Maximum Ampacity
mm^2	AWG	
0.41	22	3
0.66	20	5
0.82	18	10
1.3	16	15
2.1	14	20
3.3	12	25
5.3	10	30
8.4	8	40
The ampacities shown apply to appliances wire materials. For types of wires other than appliance wiring materials, the ampacity shall be determined from 310.15(B)(16) and 310.15(B)(17) in the National Electrical Code, ANSI/NFPA No. 70 for the type of wire employed. The correction factors of the referenced tables need not be applied.		

10.9 The wiring of a range shall be located so that it will not be exposed to the vapors discharged from an oven vent.

Exception: This requirement does not apply to the leads to a blower motor.

10.10 Internal wiring other than a grounding lead shall be reliably secured in place and shall be routed so that:

a) No wiring is located directly beneath the opening of a surface unit drip pan,

b) The wiring will return to its normal position following any movement associated with a user cleaning or servicing operation, and

c) The wiring is protected against spillage or accumulations of spillage during normal operation.

Exception: Wiring that may be exposed to accumulation of spillage in the compartment beneath a surface unit is acceptable provided the wiring is secured or supported so that a spacing of not less than 1/2 in (12.7 mm) is maintained between the wiring and a tray or other spillage-collecting surface after the units have been returned to their normal operating position following a user cleaning or servicing operation, and the spillage-collecting surface is accessible without the use of tools for cleaning by the user.

10.11 Wire routing devices employed to reduce likelihood of exposure of wires to higher than investigated end-use temperatures, rough, sharp, or moving parts, spillage or accumulations of spillage, or employed to segregate insulated conductors shall be constructed of plated steel, aluminum, painted steel, brass, porcelain enameled steel, or a polymeric material. These devices shall be provided with smooth rounded surfaces or equivalent means upon which the insulated conductors may bear and shall be investigated for the temperatures involved. Additionally, polymeric wire routing devices shall comply with the applicable requirements in the Standard for Positioning Devices, UL 1565.

10.12 A hole through which insulated conductors pass in a sheet-metal wall within the overall enclosure of an appliance shall be provided with a smooth, rounded bushing; or shall have smooth, rounded surfaces or an equivalent means upon which the insulated conductors may bear, to prevent abrasion of the insulation.

10.13 In addition to the requirements in 10.11, Insulating bushings shall comply with the Standard for Insulating Bushings, UL 635.

ULNORM.COM : Click to view the full PDF of UL 858 2023

10.14 Insulated conductors may be bunched and passed through a single opening in a metal wall within the enclosure of the appliance.

10.15 The insulation of a conductor that is connected at all times to the identified terminal or lead described in 9.2.3.16 and 9.2.3.17 shall be finished to show a white or gray color, and shall be readily distinguishable from the finish of the insulation on other conductors.

10.16 Aluminum conductors, insulated or uninsulated, used as internal wiring, such as for internal connection between current-carrying parts or as motor windings, shall be terminated by a method acceptable for the combination of metals involved at the point of connection.

10.17 With reference to the requirements in 10.14, a wire-binding screw or a pressure wire connector used as a terminating device shall be acceptable for use with aluminum under the conditions involved – for example, temperature, heat cycling, vibration, and the like.

10.18 Quick-connect type wire connectors shall be suitable for the wire size, type (solid or stranded), conductor material (copper or aluminum) and the number of conductors terminated. If insulated, they shall be rated for the voltage and temperature of the intended use. They shall be applied per the installation instructions of the wire connector manufacturer.

10.19 Quick-connect terminals, both connectors and tabs, for use with one or two 22 – 10 AWG copper conductors, having nominal widths of 2.8, 3.2, 4.8, 5.2, and 6.3 mm (0.110, 0.125, 0.187, 0.205, and 0.250 in), intended for internal wiring connections in appliances, or for the field termination of conductors to the appliance, shall comply with the Standard for Electrical Quick-Connect Terminals, UL 310.

Exception: Other sizes of quick-connect terminals shall be investigated with respect to crimp pull out, insertion-withdrawal, temperature rise, and all tests shall be conducted in accordance with UL 310.

10.20 Wire connectors shall comply with the Standard for Wire Connectors, UL 486A-486B.

10.21 Splicing wire connectors shall comply with the Standard for Splicing Wire Connectors, UL 486C.

10.22 Single and multi-pole connectors for use in data, signal, control and power applications within and between electrical equipment, and that are intended for factory assembly to copper or copper alloy conductors, or for factory assembly to printed-wiring boards, shall comply with the Standard for Component Connectors for Use in Data, Signal, Control and Power Applications, UL 1977.

10.23 Multi-pole splicing wire connectors that are intended to facilitate the connection of hard-wired utilization equipment to the branch-circuit conductors of buildings shall comply with the Standard for Insulated Multi-Pole Splicing Wire Connectors, UL 2459.

10.24 Equipment wiring terminals for use with all alloys of copper, aluminum, or copper-clad aluminum conductors, shall comply with the Standard for Equipment Wiring Terminals for Use with Aluminum and/or Copper Conductors, UL 486E.

10.24.1 Figure 10.3 provides a flowchart of the flammability requirements for polymeric materials in connectors. All electrical connections where the total circuit load is greater than 60 W during normal operation shall:

a) Comply with 10.24.3, 10.24.4, and 10.24.5, or

b) Be evaluated as specified in Abnormal Operation – Nichrome Wire Test, Section 77A.

ULNORM.COM : Click to view the full PDF of UL 858 2023

10.24.1.1 A risk of fire is considered to exist at any two points in a circuit where a power of more than 15 watts can be delivered into an external resistor connected between the two points within 5 seconds. To deliver 15 watts at a connector, the circuit must have a nominal load of 60 watts or more. This is based on the maximum power transfer theorem that shows an electrical connection can only dissipate 1/4 of the power of the load when the resistance of the connection is equal to the resistance of the load.

10.24.1.2 Electrical connections are not required to comply with 10.24.1 when all mating parts of the electrical connection are provided with a component (e.g. contacts within a switch or relay, connections within a motor, etc.) that complies with the relevant component standard. Electrical connections that are mated to the component from the appliance are required to comply with 10.24.1.

10.24.2 The requirements in 10.24.1 shall not apply to welded or soldered connections.

10.24.3 With reference to 10.24.1, components such as wire, tubing, sleeving, or tape that are located within 3 mm of an electrical connection as shown in Figure 10.1 shall have a flammability classification as follows:

a) VW-1 for wire evaluated in accordance with the Reference Standard for Electrical Wires, Cables, and Flexible Cords, UL 1581;

b) VW-1 for tubing and sleeving evaluated in accordance with the Standard for Extruded Insulating Tubing, UL 224 or the Standard for Coated Electrical Sleeving, UL 1441; or

c) Evaluated in accordance with the Standard for Polyvinyl Chloride, Polyethylene, and Rubber Insulating Tape, UL 510 for flame-retardant insulating tape.

ULNORM.COM : Click to view the full PDF of UL 858 2023