IEC 60238

Edition 9.0 2016-07
REDLINE VERSION

INTERNATIONAL STANDARD

colour inside

Edison screw lampholders

IECNORM.COM : Click to view the full PDF of IEC 60238:2016 RLV

IEC 60238:2016-07 RLV(en)

THIS PUBLICATION IS COPYRIGHT PROTECTED
Copyright © 2016 IEC, Geneva, Switzerland

All rights reserved. Unless otherwise specified, no part of this publication may be reproduced or utilized in any form or by any means, electronic or mechanical, including photocopying and microfilm, without permission in writing from either IEC or IEC's member National Committee in the country of the requester. If you have any questions about IEC copyright or have an enquiry about obtaining additional rights to this publication, please contact the address below or your local IEC member National Committee for further information.

IEC Central Office
3, rue de Varembé
CH-1211 Geneva 20
Switzerland

Tel.: +41 22 919 02 11
Fax: +41 22 919 03 00
info@iec.ch
www.iec.ch

About the IEC
The International Electrotechnical Commission (IEC) is the leading global organization that prepares and publishes International Standards for all electrical, electronic and related technologies.

About IEC publications
The technical content of IEC publications is kept under constant review by the IEC. Please make sure that you have the latest edition, a corrigenda or an amendment might have been published.

IEC Catalogue - webstore.iec.ch/catalogue
The stand-alone application for consulting the entire bibliographical information on IEC International Standards, Technical Specifications, Technical Reports and other documents. Available for PC, Mac OS, Android Tablets and iPad.

IEC publications search - www.iec.ch/searchpub
The advanced search enables to find IEC publications by a variety of criteria (reference number, text, technical committee,…). It also gives information on projects, replaced and withdrawn publications.

IEC Just Published - webstore.iec.ch/justpublished
Stay up to date on all new IEC publications. Just Published details all new publications released. Available online and also once a month by email.

Electropedia - www.electropedia.org
The world's leading online dictionary of electronic and electrical terms containing 20 000 terms and definitions in English and French, with equivalent terms in 15 additional languages. Also known as the International Electrotechnical Vocabulary (IEV) online.

IEC Glossary - std.iec.ch/glossary
65 000 electrotechnical terminology entries in English and French extracted from the Terms and Definitions clause of IEC publications issued since 2002. Some entries have been collected from earlier publications of IEC TC 37, 77, 86 and CISPR.

IEC Customer Service Centre - webstore.iec.ch/csc
If you wish to give us your feedback on this publication or need further assistance, please contact the Customer Service Centre: csc@iec.ch.

IECNORM.COM : Click to view the full PDF of IEC 60228:2016 RLV

IEC 60238

Edition 9.0 2016-07
REDLINE VERSION

INTERNATIONAL STANDARD

colour inside

Edison screw lampholders

IECNORM.COM : Click to view the full PDF of IEC 60238:2016 RLV

INTERNATIONAL
ELECTROTECHNICAL
COMMISSION

ICS 29.140.10

ISBN 978-2-8322-3538-6

Warning! Make sure that you obtained this publication from an authorized distributor.

® Registered trademark of the International Electrotechnical Commission

CONTENTS

FOREWORD 4
~~1 General~~
1 Scope 6
2 Normative references 7
3 Terms and definitions 8
4 General requirement 12
5 General conditions for tests 12
6 Standard ratings 14
7 Classification 15
8 Marking 16
9 Dimensions 18
14 Switched lampholders 33
12 Provision for earthing 27
13 Construction 28
10 Protection against electric shock 21
11 Terminals 23
15 Moisture resistance, insulation resistance and electric strength 34
16 Mechanical strength 36
17 Screws, current-carrying parts and connections 41
18 Creepage distances and clearances 42
19 Normal operation 46
20 General resistance to heat 47
21 Resistance to heat, fire and tracking 49
22 Resistance to excessive residual stresses (season cracking) and to rusting 52
Annex A (normative) Season cracking/corrosion test 73
Annex B (informative) Guidance for requirements in IEC 61058-1 applicable to switches in lampholders (see 14.2) 75
Annex C (informative) Guidance for special requirements in appliance standards – Household and similar electrical appliances 77
Annex D (informative) Schedule of amended subclauses containing more serious/critical requirements which require products to be retested 79
Bibliography 80

Figure 1a –Nipple thread for lampholders: metric thread. Basic profile and design profile for the nut and for the screw 53
Figure 1b –Nipple thread for lampholders: ISO standard pipe thread. Basic profile and design profile for the nut and for the screw 54
Figure 2a – Gauges for metric ~~ISO~~ thread for nipples 55
Figure 2b – Gauges for ISO standard pipe thread for nipples 56
Figure 3 – Gauge for holes for backplate lampholder screws 57
Figure 4 – Normal operation test apparatus 58
Figure 5 – Test caps for the test of Clause 18 59

IECNORM.COM : Click to view the full PDF of IEC 60238:2016 RLV

Figure 6 – Torque apparatus 60
Figure 7 – Tumbling barrel 61
Figure 8 – Impact-test apparatus 62
Figure 9 – Pressure apparatus 63
Figure 10 – Ball-pressure test apparatus 63
Figure 11 – Test cap for the tests of 15.4 and 20.3 64
Figure 12 – Bending apparatus 65
Figure 13 – Test cap A and test cap B for lampholders E14 *(2 of 2)* 67
Figure 14 – Test cap for lampholders E27 68
Figure 15 – Test cap for lampholders E40 69
Figure 16 – Standard test finger (according to IEC 60529) 70
Figure 17 – Clarification of some definitions 71
Figure 18 – Preparation of specimens for the needle-flame test of 21.4 72

Table 1 – Thickness of screw shells and contacts 19
Table 2 – Minimum effective screw lengths 20
Table 3 – Dimensions of threaded entries and set screws 21
Table 4 – Minimum dimensions of pillar-type terminals 25
Table 5 – Minimum dimensions of screw-type terminals 25
Table 6 – Pull and torque values 31
Table 7 – Insertion torque 33
Table 8 – Minimum and maximum removal torques 33
Table 9 – Test cap dimensions 37
Table 10 – Heights of fall 38
Table 11 – Maximum deformation values 40
Table 12 – Torque values 41
Table 13a – Minimum distances for AC (50/60 Hz) sinusoidal voltages: Impulse withstand category II 44
Table 13b – Minimum distances for AC (50/60 Hz) sinusoidal voltages: Impulse withstand category III 45
Table 14 – Minimum distances for non-sinusoidal pulse voltages 45
Table 15 – Heating cabinet temperatures 48
Table A.1 – pH adjustment 73

IECNORM.COM : Click to view the full PDF of IEC 60238:2016 RLV

INTERNATIONAL ELECTROTECHNICAL COMMISSION

EDISON SCREW LAMPHOLDERS

FOREWORD

1) The International Electrotechnical Commission (IEC) is a worldwide organization for standardization comprising all national electrotechnical committees (IEC National Committees). The object of IEC is to promote international co-operation on all questions concerning standardization in the electrical and electronic fields. To this end and in addition to other activities, IEC publishes International Standards, Technical Specifications, Technical Reports, Publicly Available Specifications (PAS) and Guides (hereafter referred to as "IEC Publication(s)"). Their preparation is entrusted to technical committees; any IEC National Committee interested in the subject dealt with may participate in this preparatory work. International, governmental and non-governmental organizations liaising with the IEC also participate in this preparation. IEC collaborates closely with the International Organization for Standardization (ISO) in accordance with conditions determined by agreement between the two organizations.

2) The formal decisions or agreements of IEC on technical matters express, as nearly as possible, an international consensus of opinion on the relevant subjects since each technical committee has representation from all interested IEC National Committees.

3) IEC Publications have the form of recommendations for international use and are accepted by IEC National Committees in that sense. While all reasonable efforts are made to ensure that the technical content of IEC Publications is accurate, IEC cannot be held responsible for the way in which they are used or for any misinterpretation by any end user.

4) In order to promote international uniformity, IEC National Committees undertake to apply IEC Publications transparently to the maximum extent possible in their national and regional publications. Any divergence between any IEC Publication and the corresponding national or regional publication shall be clearly indicated in the latter.

5) IEC itself does not provide any attestation of conformity. Independent certification bodies provide conformity assessment services and, in some areas, access to IEC marks of conformity. IEC is not responsible for any services carried out by independent certification bodies.

6) All users should ensure that they have the latest edition of this publication.

7) No liability shall attach to IEC or its directors, employees, servants or agents including individual experts and members of its technical committees and IEC National Committees for any personal injury, property damage or other damage of any nature whatsoever, whether direct or indirect, or for costs (including legal fees) and expenses arising out of the publication, use of, or reliance upon, this IEC Publication or any other IEC Publications.

8) Attention is drawn to the Normative references cited in this publication. Use of the referenced publications is indispensable for the correct application of this publication.

9) Attention is drawn to the possibility that some of the elements of this IEC Publication may be the subject of patent rights. IEC shall not be held responsible for identifying any or all such patent rights.

This redline version of the official IEC Standard allows the user to identify the changes made to the previous edition. A vertical bar appears in the margin wherever a change has been made. Additions are in green text, deletions are in strikethrough red text.

IECNORM.COM : Click to view the full PDF of IEC 60238:2016 RLV

International Standard IEC 60238 has been prepared by subcommittee 34B: Lamp caps and holders, of IEC technical committee 34: Lamps and related equipment.

This ninth edition cancels and replaces the eighth edition published in 2004, Amendment 1: 2008 and Amendment 2:2011. This edition constitutes a technical revision.

This edition includes the following significant technical changes with respect to the previous edition:

a) Addition of a pull test for certain E5 and E10 lampholders.

b) Annex D listing amended requirements/clauses which require products to be retested.

The text of this standard is based on the following documents:

FDIS	Report on voting
34B/1852/FDIS	34B/1860/RVD

Full information on the voting for the approval of this standard can be found in the report on voting indicated in the above table.

This publication has been drafted in accordance with the ISO/IEC Directives, Part 2.

In this standard, the following print types are used:

– *compliance statements: in italic type.*

The committee has decided that the contents of this publication will remain unchanged until the stability date indicated on the IEC web site under "http://webstore.iec.ch" in the data related to the specific publication. At this date, the publication will be

- reconfirmed,
- withdrawn,
- replaced by a revised edition, or
- amended.

IMPORTANT – The "colour inside" logo on the cover page of this publication indicates that it contains colours which are considered to be useful for the correct understanding of its contents. Users should therefore print this publication using a colour printer.

IECNORM.COM : Click to view the full PDF of IEC 60238:2016 RLV

EDISON SCREW LAMPHOLDERS

~~1 General~~

1 Scope

This International Standard applies to lampholders with Edison thread E14, E27 and E40, designed for connection to the supply of lamps and semi-luminaires[1] only.

It also applies to switched-lampholders for use in AC circuits only, where the working voltage does not exceed 250 V r.m.s.

This standard also applies to lampholders with Edison thread E5 designed for connection to the supply mains of series connected lamps, with a working voltage not exceeding 25 V, to be used indoors, and to lampholders with Edison thread E10 designed for connection to the supply mains of series connected lamps, with a working voltage not exceeding 60 V, to be used indoors or outdoors. It also applies to lampholders E10 for building-in, for the connection of single lamps to the supply. These lampholders are not intended for retail sale.

As far as it reasonably applies, this standard also covers lampholders other than lampholders with Edison thread designed for connection of series-connected lamps to the supply.

NOTE This type of lampholder is for example used in Christmas tree lighting chains.

As far as it reasonably applies, this standard also covers adapters.

This standard also covers lampholders which are, wholly or partly, integral with a luminaire or intended to be built into appliances. It covers the requirements for the lampholder only. For all other requirements, such as protection against electric shock in the area of the terminals or of the lamp cap, the requirements of the relevant appliance standard ~~shall be~~ are observed and tested after building into the appropriate equipment, when that equipment is tested according to its own standard. Such lampholders as well as lampholders provided with a snap-on outer shell, for use by luminaire manufacturers only, are not for retail sale.

This standard applies to lampholders to be used indoors or outdoors in residential as well as in industrial lighting installations. It also applies to candle lampholders. In locations where special conditions prevail, as for street lighting, on board ships, in vehicles and in hazardous locations, for example where explosions are liable to occur, special constructions may be required.

~~NOTE 1~~ This standard does not apply to three-light lampholders E26d.

~~NOTE 2~~ This standard is based on the following data relative to lamps for general lighting service:

– caps E14 are used for lamps with a current not exceeding 2 A;
– caps E27 are used for lamps with a current not exceeding 4 A;
– caps E40 are used for lamps with a current not exceeding 16 A, or 32 A if the nominal voltage of the supply does not exceed 130 V (see 5.5 and 6.3).

[1] Requirements for lampholders suitable for semi-luminaires are under consideration.

IECNORM.COM : Click to view the full PDF of IEC 60238:2016 RLV

~~NOTE 3 If the nominal voltage of the supply does not exceed 130 V, the maximum current for caps E40 is 32 A (see 4.5 and 5.3).~~

~~NOTE 4~~ Where lampholders are used in luminaires, their maximum operating temperatures are specified in IEC 60598.

2 Normative references

The following documents, in whole or in part, are normatively referenced in this document and are indispensable for its application. For dated references, only the edition cited applies. For undated references, the latest edition of the referenced document (including any amendments) applies.

~~NOTE With regard to IEC 60598-1, the references cited in this document are liable to change.~~

~~IEC 60061 (all parts), *Lamp caps and holders together with gauges for the control of interchangeability and safety*~~

IEC 60061-1, *Lamp caps and holders together with gauges for the control of interchangeability and safety – Part 1: Lamp caps*

IEC 60061-2, *Lamp caps and holders together with gauges for the control of interchangeability and safety – Part 2: Lampholders*

IEC 60061-3, *Lamp caps and holders together with gauges for the control of interchangeability and safety – Part 3: Gauges*

~~IEC 60068-2-20:1979, *environmental testing – Part 2: Tests – Test T: Soldering*~~

IEC 60068-2-32:1975, *Basic environmental testing procedures – Part 2-32: Tests – Test Ed: Free fall*

IEC 60068-2-75:~~1997~~ 2014, *Environmental testing – Part 2-75: Tests – Test Eh: Hammer tests*

IEC 60112:~~1979~~ 2003, *Method for the determination of the proof and the comparative tracking indices of solid insulating materials~~ under moist conditions~~*
Amendment 1:2009

IEC 60227 (all parts), *Polyvinyl chloride insulated cables of rated voltages up to and including 450/750 V*

IEC 60245 (all parts), *Rubber insulated cables – Rated voltages up to and including 450/750 V*

~~IEC 60335-1:2001, *Household and similar electrical appliances – Safety – Part 1: General requirements*~~

IEC 60352-1:1997, *Solderless connections – Part 1: Wrapped connections – General requirements, test methods and practical guidance*

IEC 60399, *Barrel thread for lampholders with shade holder ring*

IECNORM.COM : Click to view the full PDF of IEC 60238:2016 RLV

IEC 60417~~-DB:2002**)~~, *Graphical symbols for use on equipment* (available at: http://www.graphical-symbols.info/equipment)

IEC 60529:1989, *Degrees of protection provided by enclosures (IP Code)*
Amendment 1:1999
Amendment 2:2013[2]

~~IEC 60598 (all parts and sections), *Luminaires*~~

IEC 60598-1, *Luminaires – Part 1: General requirements and tests*

~~IEC 60664-1:1992, *Insulation coordination for equipment within low-voltage systems – Part 1: Principles, requirements and tests****)~~
~~Amendment 1 (2000)~~
~~Amendment 2 (2002)~~

~~IEC 60695-2-2:1991, *Fire hazard testing – Part 2: Test methods – Section 2: Needle-flame test*~~

~~IEC 60695-2-10:2000, *Fire hazard testing – Part 2–10: Glowing/hot-wire based test methods – Glow-wire apparatus and common test procedure*~~

IEC 60630, *Maximum lamp outlines for incandescent lamps*

IEC 60695-2-11:~~2000~~ 2014, *Fire hazard testing – Part 2-11: Glowing/hot-wire based test methods – Glow-wire flammability test method for end-products (GWEPT)*

IEC 60695-11-5, *Fire hazard testing – Part 11-5: Test flames – Needle-flame test method – Apparatus, confirmatory test arrangement and guidance*

IEC 61058-1:2000, *Switches for appliances – Part 1: General requirements*

ISO 4046-4:2002, *Paper, board, pulps and related terms – Vocabulary – Part 4: Paper and board grades and converted products*

3 Terms and definitions

For the purposes of this document, the following terms and definitions apply.

3.1
cord-grip lampholder
lampholder incorporating a method of retaining a flexible cord by which it may then be suspended

IECNORM.COM : Click to view the full PDF of IEC 60238:2016 RLV

~~**) "DB" refers to the IEC on-line database.~~

~~***) A consolidated edition 1.2 (2002) exists including edition 1.0 (1992) and its amendment 1 (2000) and amendment 2 (2002).~~

2 A consolidated edition 2.2 (2013) exists including edition 2.0 (1989) and its Amendment 1 (1999) and Amendment 2 (2013).

3.2
threaded entry lampholder
lampholder incorporating a threaded component at the point of entry of the supply wires permitting the lampholder to be mounted on a mating threaded support

Note 1 to entry: A threaded entry lampholder was formerly called a “nipple lampholder”.

3.3
backplate lampholder
lampholder so designed as to be suitable for mounting by means of an associated or integral backplate, directly onto a supporting surface or appropriate box

3.4
lampholder for building-in
lampholder designed to be built into a luminaire, an additional enclosure or the like

3.4.1
unenclosed lampholder
lampholder for building-in so designed that it requires additional means, for example an enclosure, to meet the requirements of this standard with regard to protection against electric shock

3.4.2
enclosed lampholder
lampholder for building-in so designed that on its own it fulfils the requirements of this standard with regard to protection against electric shock and IP classification, if appropriate

3.5
independent lampholder
lampholder so designed that it can be mounted separately from a luminaire and at the same time providing all the necessary protection according to its classification and marking

3.6
terminal/contact assembly
part or assembly of parts which provides a means of connection between the termination of a supply conductor and the contact making surfaces of the corresponding lamp cap

Note 1 to entry: For clarification of some definitions, see also Figure 17.

3.7
outer shell
cylindrical component protecting the user from contact with the lamp cap.

Note 1 to entry: It may or may not be provided with an external screw thread for fixing a shade ring.

Note 2 to entry: For clarification of some definitions, see also Figure 17.

3.7.1
snap-on outer shell
outer shell for screwless assembly which does not contain the screw shell

Note 1 to entry: The lampholder should not be used when the snap-on outer shell is removed. It is therefore recommended to place an approval mark, if provided, in such a way that it is not visible when this type of outer shell is removed.

3.8
screw shell
cylindrical component having an internal screw thread of Edison form for the retention of the corresponding lamp (cap)

IECNORM.COM : Click to view the full PDF of IEC 60238:2016 RLV

Note 1 to entry: In some constructions, the screw shell is permanently fixed to or integral with the outer shell.

Note 2 to entry: For clarification of some definitions, see also Figure 17.

3.9
insulating ring
cylindrical intermediate piece of insulating material separating a metal screw shell and a metal outer shell

Note 1 to entry: For clarification of some definitions, see also Figure 17.

3.10
shade ring
cylindrical component having an internal thread or other means to engage a corresponding support on the outer shell and intended to carry or retain a shade

Note 1 to entry: For clarification of some definitions, see also Figure 17.

3.11
dome
part of a cord-grip lampholder or threaded entry lampholder which shields the connecting terminals

Note 1 to entry: For clarification of some definitions, see also Figure 17.

3.12
basic insulation
insulation applied to live parts to provide basic protection against electric shock

Note 1 to entry: Basic insulation does not necessarily include insulation used exclusively for functional purposes.

3.13
supplementary insulation
independent insulation applied in addition to basic insulation in order to provide protection against electric shock in the event of a failure of basic insulation

3.14
double insulation
insulation comprising both basic insulation and supplementary insulation

3.15
reinforced insulation
single insulation system applied to live parts, which provides a degree of protection against electric shock equivalent to double insulation under the conditions specified

Note 1 to entry: The term "insulation system" does not imply that the insulation ~~must be~~ is one homogeneous piece. It may comprise several layers which cannot be tested singly as supplementary or basic insulation.

3.16
live part
conductive part which may cause an electric shock

3.17
type test
test or series of tests made on a type test sample, for the purpose of checking compliance of the design of a given product with the requirements of the relevant standard

IECNORM.COM : Click to view the full PDF of IEC 60238:2016 RLV

3.18
type test sample
sample consisting of one or more similar specimens submitted by the manufacturer or responsible vendor for the purpose of a type test

3.19
semi-luminaire
unit similar to a self-ballasted lamp but designed to utilize a replaceable light source and/or starting device

3.20
rated operating temperature
highest temperature for which the holder is designed

3.21
rated minimum temperature
lowest temperature for which the holder is designed (applicable only to lampholders intended for use in refrigerators and food freezers)

3.22
angled lampholder
lampholder, the rear side of which (threaded entry and/or dome) is at an angled position to the screw shell axis

3.23
lampholder with retention device
lampholder with a device intended to prevent the lamp from becoming loose in the holder

Note 1 to entry: Lamps ~~may~~ can, for example, become loose due to changes in temperature or to vibrations.

3.24
impulse withstand category
numeral defining a transient overvoltage condition

Note 1 to entry: Impulse withstand categories I, II, III and IV are used.

a) Purpose of classification of impulse withstand categories

Impulse withstand categories are to distinguish different degrees of availability of equipment with regard to required expectations on continuity of service and on an acceptable risk of failure.

By selection of impulse withstand levels of equipment insulation, co-ordination can be achieved in the whole installation, reducing the risk of failure to an acceptable level providing a basis for overvoltage control.

A higher characteristic numeral of an impulse withstand category indicates a higher specific impulse withstand of the equipment and offers a wider choice of methods for overvoltage control.

The concept of impulse withstand category is used for equipment energized directly from the mains.

b) Description of impulse withstand categories

Equipment of impulse withstand category I is equipment which is intended to be connected to the fixed electrical installations of buildings. Protective means are taken outside the equipment – either in the fixed installation or between the fixed installation and the equipment – to limit transient overvoltages to the specific level.

Equipment of impulse withstand category II is equipment to be connected to the fixed electrical installations of buildings.

Equipment of impulse withstand category III is equipment which is part of the fixed electrical installations and other equipment where a higher degree of availability is expected.

Equipment of impulse withstand category IV is for use at or in the proximity of the origin of the electrical installations of buildings upstream of the main distribution board.

3.25
primary circuit
circuit which is directly connected to the AC mains supply

IECNORM.COM : Click to view the full PDF of IEC 60238:2016 RLV

Note 1 to entry: It includes, for example, the means for connection to the AC mains supply, the primary windings of transformers, motors and other loading devices.

3.26
secondary circuit
circuit which has no direct connection to a primary circuit and derives its power from a transformer, converter or equivalent isolation device, or from a battery

Note 1 to entry: Exception: autotransformers. Although having direct connection to a primary circuit, the tapped part of them is also deemed to be a secondary circuit in the sense of this definition.

Note 2 to entry: Mains transients in such a circuit are attenuated by the corresponding primary windings. Also inductive ballasts reduce the mains transient voltage height. Therefore, components located after a primary circuit or after an inductive ballast can be suited for an impulse withstand category of one step lower, i.e. for impulse withstand category II.

3.27
adapter
component used for the electrical and mechanical connection of a lamp to a lampholder

Note 1 to entry: This definition is specific for this standard. The definition of an adapter in principle could vary very much depending on its use. In most cases such a component is used to bridge differences in the screw thread diameter between the lampholder and the lamp.

3.28
enclosed reinforced insulated lampholder
lampholder for building-in so designed that on its own it fulfils the requirements for double or reinforced insulated parts in class II applications

3.29
partly reinforced insulated lampholder
lampholder for building-in so designed that some parts of the lampholder require additional means to fulfil the requirements with regard to double or reinforced insulation

Note 1 to entry: In some cases, the dimensions might be achieved only after mounting into the luminaire.

4 General requirement

Lampholders shall be so designed and constructed that in normal use they function reliably and cause no danger to persons or surroundings.

In general, compliance is checked by carrying out all the tests specified.

In addition, the enclosure of independent lampholders shall comply with the requirements of IEC 60598-1, including the classification and marking requirements of that standard.

5 General conditions for tests

5.1 Tests according to this standard are type tests.

NOTE The requirements and tolerances permitted by this standard are related to testing of a type test sample submitted for that purpose.

Compliance of the type test sample does not ensure compliance of the whole production of a manufacturer with this safety standard.

In addition to type testing, conformity of production is the responsibility of the manufacturer and ~~may~~ can include routine tests and quality assurance.

IECNORM.COM: Click to view the full PDF of IEC 60238:2016 RLV

For further information ~~(inclusion of guidance~~ on conformity testing during manufacture ~~is in preparation)~~ see IEC 60061-4~~*****)~~.

5.2 Unless otherwise specified, the tests are made at an ambient temperature of 20 °C ± 5 °C and with the holder tested as delivered and installed as in normal use.

5.3 The tests and inspections are carried out on a total of

– nine specimens for non-switched lampholders, or
– 12 specimens for switched lampholders

in the following order of clauses:

– three specimens: Clauses 2 to 13 (except for 10.1 and 11.2) and Clauses 15 to 18;
– three specimens: Clause 14 (switched-lampholder tests only);
– three specimens: 10.1 and Clauses 19 and 20;
– two specimens: Clause 21 (of which one specimen for the test of 21.1 and the other for the tests of 21.3 or 21.4);
– one specimen: 21.5 and Clause 22.

For testing lampholders with a retention device, the retention device shall be removed.

For testing lampholders with a retention device according to 13.14, three additional specimens are required with the retention device kept in place.

~~NOTE~~ For testing of screwless terminals according to 11.2, separate specimens are required in addition.

5.4 *In case of doubt, gauges, test caps and mandrels are introduced into the specimens, unless otherwise specified, by applying the following torques:*

– *0,2 Nm for lampholders E5;*
– *0,2 Nm for lampholders E10;*
– *0,2 Nm for lampholders E14;*
– *0,4 Nm for lampholders E27;*
– *0,8 Nm for lampholders E40.*

5.5 *For lampholders E40 with a rated current of 32 A, the tests shall be based on this rated current.*

5.6 *Lampholders are deemed to comply with this standard if no specimen fails in the complete series of tests specified in 5.3.*

If one specimen fails in one test, that test and the preceding ones which may have influenced the result of that test are repeated on another set of specimens to the number required by 5.3, all of which shall then comply with the repeated tests and with the subsequent tests. Lampholders are deemed not to comply with this standard if there are more failures than one.

~~NOTE In general, it will only be necessary to repeat the relevant test unless the specimen fails in the tests according to clauses 18 and 19, or if failure occurs with regard to resilient side or central contact(s); in these cases, both tests are repeated with a second set of three specimens.~~

~~*****) IEC 60061-4: *Lamp caps and holders together with gauges for the control of interchangeability and safety – Part 4: Guidelines and general information*~~

IECNORM.COM : Click to view the full PDF of IEC 60238:2016 RLV

~~The applicant may submit, together with the first set of specimens, the additional set which may be wanted in case of failure of one specimen. The testing station shall then, without further request, test the additional specimens and will reject only if a further failure occurs.~~

~~If the additional set of specimens is not submitted at the same time, a failure of one specimen entails a rejection.~~

6 Standard ratings

6.1 Standard rated voltages are 250 V and 500 V~~ and 750 V~~.

For lampholders E14, and for switched lampholders E27, a rated voltage of 250 V only is allowed.

For lampholders E5 and E10 intended for the connection of series-connected lamps to the supply, the rated voltage shall not exceed 25 V for lampholders E5 and not exceed 60 V for lampholders E10.

NOTE 1 These values refer to the voltage between parts of different polarity.

For lampholders E10 intended for the connection of single lamps to the supply, a rated voltage of 250 V only is allowed.

NOTE 2 These lampholders~~ should be~~ are also used for such special cases as series-connected lamps, where~~by~~, because of the low number of lamps, 60 V per lampholder is exceeded.

With the exception given for lampholders E5 and E10, the rated voltage shall be not less than 250 V. Additionally a rated voltage of 125 V is allowed for lampholders E40.

Compliance is checked by inspection of the marking.

6.2 Standard rated currents are

– 0,2 A for lampholders E5;
– 0,5 A for lampholders E10;
– 2 A for lampholders E14;
– 2 A for switched-lampholders E27;
– 4 A for other lampholders E27;
– 16 A for lampholders E40.

The rated current shall be not less than the standard value.

Compliance is checked by inspection of the marking.

6.3 Lampholders E40 to be used on 125 V~~ (see note)~~ installations may have an additional nominal rating of 32 A.

NOTE This nominal rating covers the voltages up to and including 130 V.

Compliance is checked by inspection of the marking.

6.4 The rated operating temperature for lampholders intended for use in high temperature conditions (T marked holders) shall be not lower than 140 °C for lampholders E14, not lower than 170 °C for lampholders E27 and not lower than 230 °C for lampholders E40.

~~NOTE The values of the temperature marking should be increased by steps of 10 °C.~~

Compliance is checked by inspection of the marking.

IECNORM.COM : Click to view the full PDF of IEC 60238:2016 RLV

NOTE The rated operating temperatures for Edison screw lampholders without T marking are given in IEC 60598-1, Table 12.1. They are

– 135 °C for lampholders E14;

– 165 °C for lampholders E27;

– 225 °C for lampholders E40.

7 Classification

Lampholders are classified as defined in 7.1 to 7.6.

7.1 According to the material of the external parts:

– lampholders of insulating material;
– metal lampholders.

NOTE Lampholders with external parts consisting partly of metal and lampholders comprising external parts of insulating material with a conductive outer surface, for example a metallized outer shell, are considered as metal lampholders (see 13.3). This does not apply to threaded entries and external parts, for example a metal shade ring mounted onto the outside of a lampholder of insulating material, which cannot become live even in the case of an insulation fault. Metal holders with insulating coverings are considered as metal lampholders (see 10.5).

In order to check whether or not a surface is conductive, two stripe-electrodes 1,5 mm wide, 25 mm long and with a distance of 2 mm from each other are applied to the surface (e.g. with silver conductive paint). In accordance with 15.4, the insulating resistance is measured between the stripes. The surface is considered to be conductive if the resistance is less than 5 MΩ.

7.2 According to degree of protection against ingress of water:

– ordinary lampholders;
– drip-proof lampholders.

7.3 According to method of fixing:

– threaded entry lampholders;
– cord-grip lampholders;
– backplate lampholders;
– other lampholders.

NOTE Examples of other lampholders are lampholders provided with a mechanical suspension device, e.g. a hook.

7.4 According to type:

– switched-lampholders, provided with an integral switch to control the supply to the lamp;
– non-switched lampholders.

7.5 According to protection against electric shock:

– unenclosed lampholders;
– enclosed lampholders;
– independent lampholders;
– partly reinforced insulated lampholders;
– enclosed reinforced insulated lampholders.

NOTE Where a lampholder is used with a working voltage of 50 % or less of its maximum rating, it can be regarded as equivalent to a reinforced insulated lampholder.

IECNORM.COM : Click to view the full PDF of IEC 60238:2016 RLV

7.6 According to resistance to heat:

– lampholders for rated operating temperatures up to the limits given in 6.4;
– lampholders for operating in high temperature conditions (T marked holders).

8 Marking

8.1 Lampholders, other than lampholders E5 and E10, shall be marked with the following:

– rated current, in amperes;
– rated voltage, in volts, and rated pulse voltage, in kV, if higher than
  - 2,5 kV for lampholders rated 250 V,
  - 4 kV for lampholders rated 500 V;

  ~~NOTE~~ The rated pulse voltage of the lampholder (in kV) should either be marked on the lampholder or made available in the manufacturer's catalogue or the like.

  NOTE 1 Some lampholders still show rated voltages higher than 500 V. This is an earlier way of expressing the permissible pulse voltage via a rated voltage. For such lampholders, the creepage distances and clearances can be found in IEC 60598-1.

– symbol for nature of current, if required (for switched lampholders only);
– mark of origin (this may take the form of a trade mark, manufacturer's identification mark or the name of the responsible vendor);
– type reference;

  Available technical documentation of the manufacturer like printed catalogues or online catalogues should allow a clear identification of a lampholder either by a unique catalogue number or by an identifying reference on the holder, specifying the essential characteristic features and the basic design of the product supplemented by a clear description. Variations of the basic design like for example different cable length, fixing means, colours etc., which do not affect safety or performance of the lampholder, can be disregarded in the type reference marked on the product. Variations included in the type testing procedure are listed in the corresponding test reports.

– the degree of protection against ingress of water for drip-proof lampholders (see 8.2);
– rated operating temperature "T", indicating the highest operating temperature, if applicable.

  The marking of the rated operating temperature is not required for lampholders whose exterior is made wholly of ceramic material. For these lampholders, this information, if applicable, shall either be marked on the lampholder or be made available in the manufacturer's catalogue.

For lampholders according to this standard, the distances for impulse withstand category II are usually applicable. For holders in equipment where a higher degree of availability is expected, distances for impulse withstand category III may be applicable. This information ~~has to~~ shall be indicated in the manufacturer's catalogue or the like.

Enclosed reinforced insulated lampholders offer an adequate level of protection for use in luminaires where they are accessible in normal use. This information shall be indicated in the manufacturer's catalogue or the like.

For partly reinforced insulated lampholders, sufficient creepage distances and clearances to outer accessible surfaces will require additional protection to some parts of the lampholder by the luminaire design or by use of additional attachment(s) or cover(s). This information shall be indicated in the manufacturer's catalogue or the like.

Lampholders E10 shall be marked with the following:

IECNORM.COM : Click to view the full PDF of IEC 60238:2016 RLV

– rated voltage, in volts;

– mark of origin;

– type reference;

Available technical documentation of the manufacturer like printed catalogues or online catalogues should allow a clear identification of a lampholder either by a unique catalogue number or by an identifying reference on the holder, specifying the essential characteristic features and the basic design of the product supplemented by a clear description. Variations of the basic design like for example different cable length, fixing means, colours etc., which do not affect safety or performance of the lampholder, can be disregarded in the type reference marked on the product. Variations included in the type testing procedure are listed in the corresponding test reports.

– the degree of protection against ingress of water, if applicable.

Lampholders E5 shall be marked with the following:

– mark of origin;

– type reference.

Available technical documentation of the manufacturer like printed catalogues or online catalogues should allow a clear identification of a lampholder either by a unique catalogue number or by an identifying reference on the holder, specifying the essential characteristic features and the basic design of the product supplemented by a clear description. Variations of the basic design like for example different cable length, fixing means, colours etc., which do not affect safety or performance of the lampholder, can be disregarded in the type reference marked on the product. Variations included in the type testing procedure are listed in the corresponding test reports.

Compliance is checked by inspection.

NOTE 2 The type reference for lampholders E10 and E5 ~~may~~ can be a catalogue number.

8.2 If symbols are used for current and voltage, A shall denote amperes and V volts.

~~NOTE~~ Alternatively, for volt and ampere ratings, figures may be used alone, the figure for the rated current being marked before or above that for the rated voltage and separated from the latter by an oblique stroke or line.

Therefore the marking of current and voltage may be as follows:

2 A 250 V or 2/250 or $\frac{2}{250}$.

The symbol for direct current shall be $\overline{\underline{\text{– – –}}}$ (IEC 60417-5031:2002-10).

The symbol for protection against ingress of water for drip-proof lampholders shall be IPX1.

NOTE Where X is used in the IP number it indicates a missing numeral in the example, but both the appropriate numerals in accordance with IEC 60529 ~~shall be~~ are marked.

The letter T shall be followed by the value of the rated operating temperature in degrees Celsius.

Compliance is checked by inspection.

8.3 The marking of the degree of protection against ingress of water shall be on the outside of the holder.

IECNORM.COM : Click to view the full PDF of IEC 60238:2016 RLV

Compliance is checked by inspection.

8.4 An earthing terminal shall be indicated by the symbol ⏚ (IEC 60417-5019:2002-10).

This symbol shall not be placed on screws, removable washers or other easily removable parts.

Compliance is checked by inspection.

8.5 Marking shall be durable and easily legible.

Compliance is checked by inspection and, after the tests of Clause 19 have been completed, by trying to remove the marking by rubbing lightly for 15 s with a piece of cloth soaked with water and for a further 15 s with a piece of cloth soaked with petroleum spirit.

After the tests the marking shall be still legible.

NOTE The petroleum spirit used ~~should~~ typically consists of a solvent hexane with a content of aromatics of maximum 0,1 volume percentage, a kauri-butanol value of 29, an initial boiling point of approximately 65 °C, a dry-point of approximately 69 °C and a specific density of approximately 0,68 g/cm^3.

9 Dimensions

9.1 Lampholders E10, E14, E27 and E40 shall comply with the current edition of the standard sheets of the IEC 60061 series.

Compliance shall be checked by measuring in conformity with ~~the current edition of~~ IEC 60061-2, Standard Sheet 7005-20.

The minimum dimensions of the screw thread and dimension X shall be checked by means of gauges according to ~~the current edition of~~ Standard Sheets 7006-25 (E10, E14 and E40) and 7006-25A (E27), and by means of the gauge according to ~~the current edition of~~ Standard Sheet 7006-26 of IEC 60061-3.

Lampholders ~~E14 and E27,~~ designed with a barrel thread for shade holder rings and shade holder rings shall comply with ~~the current edition of~~ IEC 60399.

Compliance ~~shall be~~ is checked by means of the gauges ~~according to the current edition of~~ given in IEC 60399.

9.2 Lampholders shall allow insertion of all corresponding lamps so as to make contact.

Compliance is checked by means of gauges according to the current edition of the following standard sheets of IEC 60061-3 and according to the indications of these sheets:

- *lampholders E14: 7006-30 and 7006-31;*
- *candle lampholders E14: 7006-30A and 7006-31;*
- *lampholders E27: 7006-21 and 7006-22A;*
- *lampholders E40: 7006-23 and 7006-24.*

Pending gauges for lampholders E5 and E10, the contact-making is checked by means of the corresponding lamps. It is presumed that the manufacturer of the lampholder for the purpose of the test delivers the lamps for which the lampholder is intended.

IECNORM.COM : Click to view the full PDF of IEC 60238:2016 RLV

The checking of contact-making is done on lampholders as delivered and after the tests of Clauses 19 and 20.2.

For lampholders for use in appliances other than luminaires only:

If the fixing means of lampholders are integrated parts of the rim and the lampholder is designed for use with a selected standardized lamp only, parts of the lampholder rim could interfere with the relevant contact-making gauge. In this case, compliance with the requirements for maximum lamp outlines according to IEC 60630 for the lamp indicated in the lampholder manufacturer's instructions ~~has to~~ shall be checked. Following this checking, the contact-making gauge shall be applied after those parts of the lampholder interfering with the gauge have been removed.

~~NOTE~~ For testing such lampholders, two additional specimens specially prepared to accept the relevant contact-making gauge are required.

9.3 The following dimensions shall be not less than the values shown in Table 1.

Table 1 – Thickness of screw shells and contacts

Dimension	Lampholder				
	E5	E10	E14	E27	E40
Thickness of the screw shell, if any (mm):					
– when the shell is unsupported	0,20	0,20	0,30	0,30	0,50
– when the shell is supported by insulating material over a total distance of at least three-quarters of the circumference of the shell	0,15	0,15	0,25	0,25	0,40
Thickness of side or central contacts, if resilient (mm)	0,18	0,18	0,28	0,38	0,48[a]
[a] For the use of side-contacts in lampholders E40, see 13.11.					

Compliance is checked by measurement.

NOTE 1 Thicknesses are measured by means of a micrometer with pointed noses and ratchet screw.

For the screw shell, two sets of three measurements are made, each set carried out on one of two different generating lines of the screw shell. The mean value of the six measurements shall be at least equal to the specified value.

NOTE 2 The deletion of dimensional requirements is under consideration.

9.4 The effective length of screw engagement, if any, of outer shell and dome shall meet one of the following requirements whereby the engagement shall always be over one full turn.

Either the effective length shall be not less than the values shown in Table 2, or the effective length shall be at least two turns provided the test according to 16.3 is withstood with a torque equal to 1,2 times the torque given in 16.2.

IECNORM.COM : Click to view the full PDF of IEC 60238:2016 RLV

Table 2 – Minimum effective screw lengths

Dimension	Lampholder		
	E14	E27	E40
Minimum effective screw length (mm):			
– Metal lampholders for rolled thread	5,0	7,0	10,0
– Metal lampholders for cut thread	5,0	5,0	7,0
– Lampholders of insulating material	5,0	7,0	10,0

~~or the effective length shall be at least two turns provided the test according to 15.3 is withstood with a torque equal to 1,2 times the torque given in 15.2.~~

These requirements do not apply to lampholders E5 and E10.

Compliance is checked by measurement.

9.5 The threaded entries of lampholders shall be provided with one of the following screw threads:

– lampholders E14: M10×1;

– lampholders E27: M10×1, M13×1 or M16×1;

– lampholders E40: M13×1, M16×1 (or G3/8A).

NOTE 1 The size between brackets is non-preferred; in addition, the threaded entry M10 is mainly intended for internal wiring of luminaires.

NOTE 2 In France, threaded entry lampholders with 11 mm × 19 TPI and 17 mm × 19 TPI (turns per inch) screw threads are permitted for replacement.

The thread of the entry shall comply with Figure 1a or Figure 1b.

These requirements do not apply to lampholders E5 and E10.

Compliance is checked by measurement and by means of gauges according to Figure 2a or Figure 2b.

In case of doubt, the gauge is introduced into the entry by applying a torque of 0,5 Nm.

9.6 The dimensions of threaded entries and set screws, if any, shall be not less than the values shown in Table 3.

IECNORM.COM : Click to view the full PDF of IEC 60238:2016 RLV

Table 3 – Dimensions of threaded entries and set screws

Dimensions in millimetres

Dimension	Nominal thread diameter	
	M10×1 M13×1	M16×1 G3/8A
Length of the thread:		
– metal entry	3	8
– entry of insulating material	5	10
Diameter of set-screw:		
– screw with head	2,5	3,0
– screw without head:		
– in case of one screw	3,0	4,0
– in case of more than one screw	3,0	3,0

A negative deviation of 0,15 mm from the nominal values for thread diameter is allowed.

Compliance is checked by measurement.

These requirements do not apply to lampholders E5 and E10.

NOTE If it is necessary to take the lampholder apart in order to check compliance with the requirements under 9.3 to 9.6, such checking is done after the test of Clause 18.

9.7 Lampholders shall be so designed that they do not interfere with the proper engagement or disengagement of lamps, even if the lamp cap is slightly dented. In no case shall the holder contacts present a cutting edge to the lamp cap.

Compliance is checked by the following test:

For lampholders E27, compliance shall be checked by means of a gauge according to the current edition of Standard Sheet 7006-22B of IEC 60061-3.

For lampholders other than E27, compliance shall be checked by inspection.

10 Protection against electric shock

10.1 Lampholders E5, E10, E14 and E27 shall be so designed that the lamp caps are not accessible when they become live during insertion.

NOTE 1 Details for checking compliance regarding protection against accidental contact with live parts during insertion for lampholders E5 and E10 are under consideration. ~~Due to that~~ Because of this, lampholders E10 with a rated voltage exceeding 60 V are for sale to luminaire or other equipment manufacturers only.

For lampholders E10 with a rated voltage exceeding 60 V, the protection against electric shock ~~may~~ can be provided by measures taken in the luminaire or equipment where the lampholders are used.

Lampholders E40 shall be so designed that the lamp cap is not accessible when fully inserted.

Candle lampholders are tested without decorative cover, unless this cover cannot be removed without making the lampholders obviously useless.

Compliance is checked as follows:

IECNORM.COM : Click to view the full PDF of IEC 60238:2016 RLV

– *for lampholders E10, by means of corresponding lamps and the standard test finger, shown in Figure 16. For the purpose of the test, the lampholder manufacturer shall provide the lamps for which the lampholder is intended;*

– *for lampholders E14, E27 and E40, by means of gauges according to the current edition of the following standard sheets of IEC 60061-3:*

- *7006-31 for lampholders E14;*
- *7006-22A for lampholders E27;*
- *7006-24 for lampholders E40.*

NOTE 2 In order to ensure protection against electric shock during insertion on unused lampholders, the tests according to 10.1 are made on new specimens.

10.2 The external parts of enclosed and independent lampholders shall be so designed that live parts of the lampholder ready for use and with a corresponding normal lamp inserted are not accessible.

Candle lampholders are tested without decorative cover, unless this cover cannot be removed without making the lampholder obviously useless.

Compliance is checked by means of the standard test finger.

For the purpose of the test:

– *enclosed lampholders are mounted as in normal use, for example on a threaded support, or the like, if appropriate, and provided with the most unfavourable conductor size fitted for which the lampholders are intended;*

– *independent lampholders shall be mounted as in normal use on an appropriate plane surface.*

The standard test finger shown in Figure 16 is applied in every possible position with a force of 10 N, an electrical indicator being used to show contact with live parts.

It is recommended that a voltage of not less than 40 V be used.

NOTE Unenclosed lampholders are only tested after appropriate installation in a luminaire or other additional enclosure.

For E5 and E10 lampholders with a separate insert part mounted in an outer sleeve, the insert part shall be subjected to a pull force of 60 N for 1 min in the axial direction.

The test shall be performed by hand in order to simulate any axial misalignment as normally occurs in practice. The axial misalignment movement performed during the test should be up to 10° in any direction.

During this test, the insert part shall not become loose to such an extent that live parts become accessible with the standard test finger.

10.3 Parts providing protection against accidental contact with the lamp cap shall be reliably secured so that they will not become detached when a tightly fitting lamp is removed, or when rotating the shade, if applicable.

Compliance is checked by the following test:

The coupling between dome and outer shell is tightened initially with a torque equal to two-thirds of the torque test value specified below. The relevant parts are then subjected to a torque during 1 min in an anticlockwise direction with the following test values:

IECNORM.COM : Click to view the full PDF of IEC 60238:2016 RLV

– *1 Nm for lampholders E14;*

– *2 Nm for lampholders E27.*

The lampholder is mounted as in normal use and is tested first with and then without the appropriate test cap according to Figure 13 (test cap B) or Figure 14.

After the test, the parts providing protection against accidental contact with the lamp cap shall not have become dismantled.

It shall not be possible to dismantle lampholders E5 and E10 without the aid of a tool.

Requirements for lampholders E40 (see Figure 15) are under consideration.

10.4 Where provision is made for attaching a shade to the lampholder, it is fitted to the lampholder by separate means, such as a shade ring; it is not permitted to fix a shade between parts providing protection against electric shock.

Compliance is checked by inspection.

10.5 The external parts of

– drip-proof lampholders,

– lampholders with a rated voltage of more than 250 V,

– switched-lampholders, and

– lampholders E5 and E10

shall be of insulating material, with the exception of threaded entries and of those parts which cannot become live even in the event of a fault.

Lacquer or enamel is not deemed to provide adequate protection for the purpose of Clause 10.

Compliance is checked by inspection.

NOTE 1 Parts which are separated from live parts by double or reinforced insulation are considered as parts which cannot become live in the event of a fault.

NOTE 2 An example of an external part which cannot become live, even in the event of a fault, is a metal shade ring mounted on the outside of an insulated lampholder.

~~NOTE 3~~ Switched-lampholders with external metal parts are permitted under the conditions of 13.3.

IECNORM.COM : Click to view the full PDF of IEC 60238:2016 RLV

11 Terminals

11.1 Lampholders, other than those provided with connecting leads (tails), shall be provided with terminals which allow connection of conductors having the following nominal cross-sectional areas:

– 0,5 mm^2 to 0,75 mm^2 for lampholders E10;

– 0,5 mm^2 to 1,0 mm^2 for lampholders E14 and E27 with M10×1 threaded entry;

– 0,5 mm^2 to 2,5 mm^2 for other lampholders E27;

– 1,5 mm^2 to 4 mm^2 for lampholders E40 with a rated current of 16 A;

– 2,5 mm^2 to 6 mm^2 for lampholders E40 with a rated current of 32 A.

Compliance is checked by inspection and by fitting conductors of the smallest and largest cross-sectional area specified. For cord-grip lampholders, lampholders E10, E14 and lampholders E27 with M10×1 threaded entry, stranded conductors are used; in all other cases the conductors are of the solid type.

Threaded entry lampholders are tested in a screwed conduit.

~~NOTE~~ Lampholders E27 with screwless terminals intended for use by luminaire or equipment manufacturers only need not fulfil the requirements for all the appropriate nominal cross-sectional areas.

11.2 Connections

11.2.1 Lampholders shall be provided with at least one of the following means of connection:

– screw type terminals;
– screwless terminals;
– tabs or pins for push-on connections;
– posts for wire wrapping;
– soldering lugs;
– connecting leads (tails).

Terminal screws and nuts shall have a metric ISO thread or a thread comparable in pitch and mechanical strength.

Conductors may be connected to E5, E10 and similar small lampholders by soldering, welding, crimping or other equally effective means.

Lampholders with screwless terminals, unless intended for sale to luminaire or equipment manufacturers, shall be provided with terminals which are equally satisfactory with both rigid (solid or stranded) conductors and flexible cables or cords.

Compliance is checked by the tests of 11.2.2.

11.2.2 Terminals shall comply with the following requirements, with the restriction that the requirements referring to internal wiring relate to wiring inside independent holders and to wiring inside luminaires for holders for building-in.

All terminal tests shall be made on separate specimens which have not been subjected to any other test:

– *terminals with screw clamping shall comply with the requirements specified in 11.3 to 11.6 inclusive, and 11.8;*
– *screwless terminals shall comply with Clause 15 of IEC 60598-1, provided that the heating test is carried out at the rated operating temperature of the lampholder ± 5 °C;*
– *tabs or pins for push-on connections shall comply with Clause 15 of IEC 60598-1;*
– *posts for wire wrapping shall comply with IEC 60352-1. Wire wrapping applies only to single solid round wire for internal wiring;*
– *soldering lugs shall comply with the requirements for good solderability. Suitable requirements can be found in IEC 60068-2-20;*
– *connecting leads (tails) shall comply with the requirements ~~prescribed~~ specified in 11.10.*

IECNORM.COM : Click to view the full PDF of IEC 60238:2016 RLV

11.3 Terminals shall be fixed in such a way that they will not work loose when fastening or loosening the conductors.

For screw terminals, compliance is checked by inspection and by fastening and loosening a conductor of the largest cross-sectional area specified in 11.1 10 times, the applied torque being two-thirds of the torque specified in Clause 14 of IEC 60598-1.

NOTE Terminals ~~may~~ can be prevented from working loose by fixing with one screw in a recess without appreciable play, or by other suitable means. Covering with sealing compound without other means of locking is not deemed to be sufficient.

11.4 Screw terminals shall be so designed that they clamp the conductor between metal surfaces with sufficient contact pressure and without damage to the conductor. Terminals shall be so designed that they will prevent a conductor slipping out when the screws or nuts are tightened. They shall allow a conductor to be connected without special preparation (e.g. soldering of the strands of the conductor, use of cable lugs, formation of eyelets, etc.).

Compliance is checked by inspection of the conductors after fitting according to 11.1 and after the test of 20.3.

NOTE The conductors are considered to be damaged if they show deep or sharp indentations.

11.5 Terminals of the pillar type shall have dimensions not less than those shown in Table 4.

Table 4 – Minimum dimensions of pillar-type terminals

Lampholder	Nominal thread diameter mm	Diameter of hole for conductor mm	Length of thread in pillar mm
E10	2,5	2,5	1,8
E14	2,5	2,5	1,8
E27	2,5	2,5	1,8
E40	3,5	3,5	2,5
~~NOTE~~ The diameter of the hole shall be not more than 0,6 mm larger than the diameter of the screw.			

The length of the threaded part of the terminal screw shall be not less than the sum of the diameter of the hole for the conductor and the length of thread in the pillar.

NOTE The length of the thread of the pillar is measured to the point where the thread is broken by the pillar hole.

Compliance is checked by measurement.

11.6 Screw terminals shall have dimensions not less than those shown in Table 5.

IECNORM.COM : Click to view the full PDF of IEC 60238:2016 RLV

Table 5 – Minimum dimensions of screw-type terminals

Lampholder	Nominal thread diameter mm	Length of thread under the head mm	Length of thread in nut mm	Nominal difference between diameter of head and shank of screw mm	Height of head mm
E10	2,5	4,0	1,5	2,5	1,4
E14	3,0	5,0	1,5	3,0	1,8
E27	3,5	5,0	1,5	3,5	2,0
E40	4,0	6,0	2,5	4,0	2,4

If an intermediate part locked against rotation, such as a washer or a pressure plate, is used between the head of the screw and the conductor, the difference in diameter between head and shank of the screw may be reduced by 1 mm.

Compliance is checked by measurement.

A negative deviation of 0,15 mm from the nominal values of the thread diameter and of the difference in diameter of head and shank is allowed.

NOTE If it is necessary to take the lampholder apart in order to check compliance with the requirements under 11.5 and 11.6, such checking is done after the test of Clause 18.

11.7 Terminals shall be so located that, after correct fitting of the wires, there is no risk of accidental contact between live parts and accessible metal parts.

Compliance is checked by inspection and by the following test:

The insulation is removed over a length of 4 mm from the end of a flexible conductor having the minimum nominal cross-sectional area specified in 11.1. One wire of the stranded conductor is left free and the remainder are fully inserted into and clamped in the terminal of the lampholder, mounted and installed as in normal use (locking screws tightened, etc.).

The free wire is bent without tearing the insulation back, in every possible direction, but without making sharp bends around barriers.

The free wire of a conductor connected to a live terminal shall not touch any metal part which is not a live part, and that of a conductor connected to the earthing terminal shall not touch any live part.

If necessary, the test is repeated with the free wire in another position.

NOTE The prohibition against making sharp bends around barriers does not imply that the free wire ~~shall be~~ is kept straight during the test. Sharp bends are, moreover, made if it is considered likely that such bends can occur during the normal assembly of the lampholder. See also 13.3.

11.8 Pillar terminals in which the end of the conductor is not visible shall have a length of hole beyond the terminal screw at least equal to half the value of the diameter of the screw or 2,5 mm, whichever is the higher.

Compliance is checked by measurement.

11.9 Terminals which are floating shall show no appreciable lateral play and shall not move longitudinally more than 3 mm when a lamp is removed or inserted.

IECNORM.COM : Click to view the full PDF of IEC 60238:2016 RLV

Compliance is checked by measurement.

11.10 The requirements of 11.2 to 11.6 inclusive and of 11.8 do not apply to lampholders intended to be factory-mounted in luminaires and which are provided with connecting leads (tails).

Lampholders intended to be factory-mounted in luminaires or built into equipment may be provided with connecting leads (tails), tab-terminals or equally effective means.

Connecting leads (tails) shall be connected to the lampholders by soldering, welding, crimping or by any other at least equivalent method.

Leads shall consist of insulated conductors.

Insulation of the free end of the leads may be stripped.

Fixing of the leads to the lampholders shall withstand the mechanical forces that may occur in normal use.

Compliance is checked by inspection and by the following test, which is made after the test of 20.2 on the same three specimens.

Each connecting lead is subjected to a pull of 20 N, the pull is applied without jerks for 1 min in the most unfavourable direction.

During the test leads shall not move from their fixing.

After the test, the lampholders shall show no damage within the meaning of this standard.

12 Provision for earthing

12.1 Threaded entry lampholders, cord-grip lampholders and backplate lampholders, with provisions for earthing, other than those provided with connecting leads, shall have at least one internal earthing terminal; other lampholders without threaded entry, for example, lampholders for building-in, may be provided with an external earthing terminal.

Compliance is checked by inspection.

NOTE Lampholders intended to be earthed but not provided with an earthing terminal or with connecting leads are not for retail sale.

12.2 Accessible metal parts of lampholders without earthing terminal, which may become live in the event of an insulation fault, shall allow reliable earthing.

There shall be earth continuity between a metal dome and the outer shell, if of metal, when the shell is not separated from live parts by double or reinforced insulation.

NOTE For the purpose of this requirement, small isolated metal screws and the like for fixing bases or covers are not deemed to be accessible parts which ~~may~~ can become live in the event of an insulation fault.

Compliance is checked by the following test:

A rigid conductor having the smallest cross-sectional area for which the holder is intended is fitted to the earthing terminal, if provided.

IECNORM.COM : Click to view the full PDF of IEC 60238:2016 RLV

When earth continuity between the dome and the outer shell also has to be checked, the coupling between these parts shall be tightened with the torque specified:

- *1 Nm for lampholders E14;*
- *2 Nm for lampholders E27;*
- *4 Nm for lampholders E40.*

Immediately after the tests of 15.3, the resistance between the means of earthing and the dome (or the outer shell as appropriate) is measured.

For lampholders with an earthing terminal, the means of earthing is the point where the conductor leaves the terminal and for lampholders without an earthing terminal, it is the point where the earthing connection is intended to be made.

A current of at least 10 A, derived from a source with a no-load voltage not exceeding 12 V, shall be passed between the earthing terminal or earthing contact and each of the accessible metal parts in turn.

The voltage drop between the means of earthing and accessible metal part shall be measured. The resistance, calculated from the voltage drop and the current, shall not exceed 0,1 Ω.

12.3 Earthing terminals shall comply with the requirements of Clause 11.

Their clamping means shall be adequately locked against accidental loosening, and it shall not be possible to loosen screw terminals by hand and screwless terminals unintentionally by hand.

Compliance is checked by inspection and by the tests of Clause 11.

NOTE In general, the designs commonly used for current-carrying terminals (complying with the requirements of this standard) provide sufficient resilience to comply with the latter requirement; for other designs special provisions, such as the use of an adequate resilient part which is not likely to be removed inadvertently, may be necessary.

12.4 The metal of earthing terminals shall be such that there is no risk of corrosion resulting from contact with the copper of the earthing conductor.

The screw or the body of the earthing terminal shall be of brass or other metal no less resistant to corrosion, and the contact surfaces shall be bare metal.

Compliance is checked by inspection.

NOTE The risk of corrosion is particularly great when copper is in contact with aluminium.

12.5 Metal parts of the cord anchorage, including clamping screws, shall be insulated from the earthing circuit.

Compliance is checked by inspection.

13 Construction

13.1 Lampholders shall be provided with a screw thread of Edison form for holding the lamp.

IECNORM.COM : Click to view the full PDF of IEC 60238:2016 RLV

For lampholders other than E5 and E10, this thread shall be either of metal and shall be continuous over a length not less than that specified in the current edition of standard sheet 7005-20 of IEC 60061-2, or comply with the following requirements.

NOTE The requirement for a minimum length of screw thread for lampholders E5 and E10 is under consideration.

Deviation from the requirements for a metal thread is allowed provided the design and production tolerances are such that proper engagement with all gauges is ensured throughout the life of the holder delivered. On this subject, further information will be available in the annex: Surveillance tests, under consideration.

In addition, the terminal/contact assembly and the screw shell shall be so constructed and located as to prevent canting or rotation which would impair the use of the lampholder.

Deviation from the requirement for a continuous thread is allowed if this is necessary to provide a special technical advantage, such as the inclusion of a lamp retention device in a cut-away.

Compliance is checked by inspection and by a manual test with the relevant gauges, referred to in Clause 8, applied in all positions which can be achieved with reasonable force, and the holder shall still comply with the gauges, especially the feeler gauge of 0,08 mm × 5,0 mm.

Furthermore, it shall not be possible to score the neck of the bulb of a lamp made to normal standards during engagement and disengagement.

The male screw thread of an adapter shall be of the same size or larger than the female screw thread shell of the adapter.

13.2 There shall be adequate space for the supply wires in the dome of the lampholder. Parts of the lampholder with which insulated conductors may come into contact shall have no sharp edges or a shape likely to damage the insulation.

Threaded entry lampholders shall be provided with means to prevent the conduit entering too far into the entry, unless it is evident from the design that the conduit is unlikely to enter too far into the entry, for example in certain candle lampholders.

Compliance is checked by inspection and by fitting flexible cables or cords of the largest cross-sectional area according to 11.1 for lampholders E14 and lampholders E27 with M10×1 threaded entries, with conductors with a nominal cross-sectional area one size less than specified for other lampholders E27 and lampholders E40.

For cord-grip lampholders, lampholders E14 and lampholders E27 with M10×1 threaded entries, an ordinary sheathed flexible cord is used; in all other cases, two or three PVC insulated single-core cables are used.

For threaded entry lampholders, the dome of the lampholder is screwed onto a conduit having a length of about 10 cm. The cables are then introduced into the conduit and dome. The ends of the cables, after having been prepared in the usual manner, are connected to the terminals of the lampholder. If possible, the connection is made with the part carrying the terminals in a position where the shortest distance between the plane of the upper edge of the dome and the nearest part of the terminals is 10 mm. With the terminals held in this position, the cables are tightened and clamped at the free end of the conduit. After this, the lampholder is assembled.

After dismantling, the cables and cords shall not be damaged.

NOTE 1 For lampholders E27 and E40, a test with conductors with maximum cross-sectional area according to 11.1 is under consideration.

IECNORM.COM : Click to view the full PDF of IEC 60238:2016 RLV

NOTE 2 The requirement concerning sharp edges is not meant for the outer end of the threaded entry, since they are not in contact with the wires when the lampholder is mounted on a conduit.

In case of doubt with regard to the means to prevent the conduit entering too far into the entry of a threaded entry lampholder, the lampholder is screwed onto a steel conduit or mandrel having squared ends (edges left sharp). The conduit or the mandrel is provided with a full thread having the minimum dimensions shown in Figure 1a or Figure 1b.

During this test, the following torque is applied for 1 min:

– *1,0 Nm for threaded entries M10×1;*

– *1,3 Nm for threaded entries M13×1;*

– *1,6 Nm for threaded entries M16×1 and G3/8A.*

After this test, the conduit or the mandrel shall not have entered into the space provided for the supply wires in the dome of the lampholder, and the lampholder shall not show any change impairing its further use.

13.3 Accessible parts of switched lampholders shall be of insulating material unless the design is such that a live wire detached from its terminal cannot touch accessible metal parts or parts of the earthing circuit and that terminal screws or screws in threaded entries which have become loose cannot bridge accessible metal parts, including earthing terminals, and live parts.

Compliance is checked by inspection.

NOTE This requirement does not necessarily imply either complete or partial insulating lining.

13.4 In case of lampholders with metal screw shell and metal outer shell, contact between these parts shall be prevented by an insulating ring which shall not be separable from the live parts or the metal outer shell by hand.

Compliance is checked by inspection.

NOTE The protection by the insulating ring is considered sufficient if its length is approximately equal to that of the screw shell.

13.5 It shall be possible to lock the threaded entry on the conduit. Locking devices can either be part of the lampholder or be provided by the design of a luminaire.

Except for angled lampholders, it shall be possible to operate the locking device from the inside, if provided as part of the lampholder.

~~NOTE~~ If ~~such means are~~ a locking device is provided by the design of a luminaire, ~~their~~ its efficiency cannot be checked when testing the lampholder; such a check ~~should~~ shall be made during testing of the luminaire.

NOTE Such lampholders are not intended for retail sale.

This requirement does not apply to lampholders E5 and E10.

Compliance is checked by inspection and, for lampholders having an integral locking device, by the test of 16.4.

13.6 Cord-grip lampholders and all lampholders designed for chain connection shall be provided with a device allowing the lampholder to be so fixed to a flexible cord that the conductors are relieved from strain, including twisting, where they are connected to the terminals, and that the outer covering of the cord is gripped in the lampholder and is

IECNORM.COM : Click to view the full PDF of IEC 60238:2016 RLV

protected from abrasion. It shall be clear how the relief from strain and the prevention of twisting is intended to be effected.

It shall not be possible to push the cord into the lampholder to such an extent that the cord is subjected to undue mechanical or thermal stress.

Makeshift precautions, such as tying the cord into a knot or tying the end with string, are not permissible.

The device shall be of insulating material or be provided with a fixed insulating lining if otherwise an insulation fault on the cord could make accessible metal parts live.

The design shall be such that the device:

– is at least one part fixed to or integral with the lampholder;
– is suitable for the different types of flexible cord which may be connected to the lampholder;
– does not exert excessive pressure on the cord;
– is unlikely to be damaged when it is tightened or loosened as in normal use.

The device shall be suitable for flexible cords of the following types:

– 60245 IEC 51;
– 60245 IEC 53 or the like;
– 60227 IEC 52.

Compliance is checked by inspection and by the following test:

The lampholder is fitted with a flexible cord, the device for strain and twist relief being appropriately used. The conductors are introduced into the terminals and the terminal screws are slightly tightened, so that the conductors cannot easily change their position. After this preparation, it shall not be possible to push the cord further into the lampholder.

The flexible cord is then subjected 100 times to a pull of the appropriate value shown in the Table 6, each for a duration of 1 s. The pull shall not be applied in jerks.

Immediately afterwards, the flexible cord is subjected for a period of 1 min to a torque as specified in Table 6.

Table 6 – Pull and torque values

Total nominal cross-sectional area of all conductors together mm^2	Pull N	Torque Nm
Up to and including 1,5	60	0,15
Over 1,5 up to and including 3	60	0,25
Over 3 up to and including 5	80	0,35
Over 5 up to and including 8	120	0,35

The lampholders are tested with each of the appropriate types of cord, as specified before, complying with IEC 60245 or IEC 60227.

The test is first made with conductors of the smallest cross-sectional area specified in 11.1 as well as with conductors of either the largest cross-sectional area allowed by the

IECNORM.COM : Click to view the full PDF of IEC 60238:2016 RLV

suspending device or the largest cross-sectional area specified in 11.1, whichever is the smaller.

For lampholders designed for chain connection, the test is carried out with the cables for which the lampholder is designed. The cable is subjected 50 times to a pull of 30 N. The torque test is not carried out.

During the test, no damage to the flexible cord shall be caused by the device for strain and twist relief. At the end of the test, the cord shall not have been displaced by more than 2 mm, and the ends of the conductors shall not have been noticeably displaced in the terminals.

In order to enable the displacement to be measured, before starting the test, a mark is made on the cord under strain at a distance approximately 2 cm from the strain-relieving device. At the end of the test, the displacement of this mark in relation to the strain device is measured while the cord is still under strain.

13.7 Suspending devices of enclosed and independent lampholders shall have no accessible metal parts which can become alive, even in the event of a fault in the lampholder. Moreover, suspending devices intended to be screwed into threaded entry lampholders shall comply with the requirements of 13.2.

Compliance is checked by inspection and by the test of 13.6.

13.8 Backplate lampholders not specifically intended for building-in shall have a recess for supply wires. This recess shall have the following minimum dimensions in order to allow back entry from a conduit perpendicular to the mounting surface of the lampholder:

– height 7 mm;
– length equal to diameter or width of the base;
– width 16 mm enlarged to a circular space 23 mm in diameter in the centre.

Compliance is checked by measurement.

The dimensional requirement does not apply to lampholders E5 and E10.

13.9 The base of backplate lampholders, other than those specifically intended for building-in, shall be suitable for fixing by means of screws with a diameter of at least 4 mm.

Compliance is checked by means of a gauge according to Figure 3. For this test, the plug is inserted into the hole from the back and the bush is placed on the plug from the front.

The bush shall enter the recess for the screw head.

This requirement does not apply to lampholders E5 and E10.

13.10 Where provision for cable entry/entries is made on the accessible external surface of a backplate lampholder, they shall allow the introduction of cable covering, conduit or trunking etc., as appropriate, so as to afford mechanical protection at least for a distance of 1 mm measured from the accessible external surface of the backplate lampholder.

Compliance is checked by measurement and by the installation test of 11.1.

13.11 The contacts shall be designed and constructed so as to ensure during normal use effective and reliable electrical contact.

IECNORM.COM : Click to view the full PDF of IEC 60238:2016 RLV

The functioning of the contacts shall be independent of the functioning of an optional locking device between the dome and the outer shell.

New E40 lampholder designs shall be of the contact-making shell type.

NOTE Contact-making problems with actual lamp caps have shown that the contact-making shell type is the only practical solution in this respect.

Compliance is checked by inspection and by the test of 20.2.

~~NOTE~~ A single side-contact is allowed.

13.12 Lampholders shall not be fitted with a socket-outlet.

Compliance is checked by inspection.

13.13 Devices for bridging the lamp filament shall not be integral with the lampholder.

Compliance is checked by inspection and, if necessary, by test.

13.14 Lampholders with a retention device shall be able to withstand a certain unscrewing torque.

A commercially available brass lamp cap complying with the relevant standard sheets shall be inserted into the sample lampholder with retention device, with a torque according to the type of lampholder as specified in Table 7.

Table 7 – Insertion torque

Lamp cap	Torque Nm
E27	1,5 ± 0,1
E40	2,0 ± 0,1

The lamp is then unscrewed for about 30°. In this position, the removal torque is measured.

The removal torque shall not be less than the minimum value and shall not exceed the maximum value specified in Table 8.

Table 8 – Minimum and maximum removal torques

Lamp cap	Minimum torque Nm	Maximum torque Nm
E27	0,5	2,0
E40	1,0	4,0

~~NOTE~~ When the lamp cap is damaged or is showing wear, a new cap should be used for the tests.

14 Switched lampholders

14.1 Switches are allowed only in ordinary lampholders E14 and in ordinary lampholders E27 for use up to and including 250 V.

IECNORM.COM : Click to view the full PDF of IEC 60238:2016 RLV

Compliance is checked by inspection.

14.2 Switched lampholders shall comply with the constructional requirements of 13.3 and with the additional requirements of 14.3 to 14.5, or with the relevant requirements given in IEC 61058-1.

NOTE Guidance for the selection of the relevant requirements in IEC 61058-1 is given in Annex B.

14.3 Switches in lampholders shall be capable of making and breaking a load comprising a filament lamp or self-ballasted lamp for general lighting service (GLS).

Compliance is checked by the following tests:

Switches in lampholders E14 shall be tested for an operating temperature of 100 °C, and switches in lampholders E27 shall be tested for an operating temperature of 125 °C.

Switches in lampholders intended for use in refrigerators or food freezers shall be tested at the rated operating temperatures.

Switches in lampholders with temperature marking shall be tested for operating temperatures as follows:

– *lampholders E14: the temperature marking of the lampholder minus 40 °C;*
– *lampholders E27: the temperature marking of the lampholder minus 50 °C.*

The switch is tested with alternating current (cos φ = 0,6 ± 0,05) at 1,1 times rated voltage and 1,25 times rated current.

The switch shall be operated in a normal manner for 200 switch movements at a rate of 30 movements per minute at regular intervals.

The switch is then tested with alternating current (cos φ = 1) at rated voltage and rated current.

The switch shall be operated in a normal manner for 20 000 switch movements at a rate of 30 movements per minute at regular intervals.

NOTE Replacement of the above test by the corresponding test of IEC 61058-1 is under consideration.

At the conclusion of the test, the lampholder shall withstand the tests specified in 15.4 for insulation resistance and electric strength and shall be in satisfactory working order.

14.4 Switched lampholders shall be so constructed that accidental contact between moving parts of the switch and the supply wires is prevented.

Compliance is checked by the test of 11.1 and by a manual test.

14.5 The switch-operating member shall be effectively insulated from live parts and, if it is broken or damaged, it shall not expose live parts.

Compliance is checked by inspection and by the tests specified in 14.3.

14.6 Switches in lampholders intended for use in refrigerators or food freezers may be tested with a lamp according to the expected wattage rating for lamps of the appliance.

IECNORM.COM : Click to view the full PDF of IEC 60238:2016 RLV

15 Moisture resistance, insulation resistance and electric strength

15.1 The enclosure of drip-proof lampholders shall provide the necessary degree of protection against ingress of water.

Compliance is checked by the following test.

Lampholders are fitted with the cables or conduits for which they are designed.

Backplate lampholders are mounted on a vertical surface with one drain hole, if any, open and directed downwards. Other lampholders are mounted with their lamp entry pointing vertically downwards.

The test is made by means of equipment, the principle of which is shown in Figure 3 of IEC 60529:1989. The rate of discharge shall be reasonably uniform over the whole area of the apparatus and shall produce a rainfall of between 3 mm and 5 mm of water per minute, falling vertically from a height of 200 mm measured from the lampholder. The test duration is 10 min. The water used for the test shall be at a temperature of 15 °C ± 10 °C.

Immediately after this treatment, the lampholder shall withstand the same electric strength test as specified in 15.4, and inspection shall show that water has not entered to an appreciable extent.

NOTE It is considered that water has entered to an appreciable extent if it has come into contact with live parts. In this case, a screw shell which is only live when a lamp is inserted is not considered as a live part.

15.2 Inlet openings of drip-proof lampholders shall allow the connection of the supply wires in such a way that drops of water running along the wires cannot reach the inside of the lampholder.

Compliance is checked by inspection.

15.3 Lampholders shall be proof against humid conditions which may occur in normal use.

Compliance is checked by the humidity treatment described in 15.3 followed immediately by the measurement of the insulation resistance and by the electric strength test specified in 15.4.

Cable entries, if any, are left open; if knock-outs are provided, one of them is opened.

The humidity treatment is carried out in a humidity cabinet containing air with a relative humidity maintained between 91 % and 95 %. The temperature of the air, at all places where specimens can be located, is maintained within 1 °C of any convenient value t between 20 °C and 30 °C.

Before being placed in the humidity cabinet, the specimens are brought to a temperature between t and $(t + 4)$ °C.

Lampholders are kept in the cabinet:

- *two days (48 h) for ordinary lampholders;*
- *seven days (168 h) for IPX1 drip-proof lampholders.*

NOTE 1 In most cases, the specimens ~~may~~ can be brought to the specified temperature by keeping them at this temperature for at least 4 h before the humidity treatment.

NOTE 2 Relative humidity between 91 % and 95 % can be obtained by placing in the humidity cabinet a saturated solution of sodium sulphate (Na_2SO_4) or potassium nitrate (KNO_3) in water, having a sufficiently large contact

IECNORM.COM : Click to view the full PDF of IEC 60238:2016 RLV

surface with the air. In order to achieve the specified conditions within the cabinet using this method, it is ~~necessary~~ important to ensure constant circulation of the air within and, in general, to use a cabinet which is thermally insulated.

After this treatment, the lampholders shall show no damage within the meaning of this standard.

15.4 The insulation resistance and the electric strength shall be adequate:

a) between live parts of different polarity;

b) between such live parts and external metal parts, including fixing screws of the base or enclosure of backplate lampholders, and accessible assembling screws;

c) between the inner and outer surfaces of the lining of metal enclosures, if such accessible lining is required in accordance with 13.3 to give protection or if the distance between any live part and the metal of the enclosure is smaller than that required under footnote b in Tables 13a and 13b.

Compliance is checked by an insulation-resistance measurement and an electric strength test made immediately after the humidity treatment in the humidity cabinet, or in the room in which the specimens were brought to the prescribed temperature.

The insulation resistance is measured with a DC voltage of approximately 500 V, the measurement being made 1 min after application of the voltage.

The insulation resistance is measured consecutively:

a) between live parts of different polarity;

b) between such live parts connected together and the body;

c) between accessible metal parts and metal foil in contact with the inner surface of insulating lining, if any.

The term "body" used in item b) includes external metal parts, fixing screws of the base and of the enclosure, accessible assembling screws and metal foil in contact with the surface of external insulating parts.

Measurements prescribed in items a) and b) are first made on the lampholder in which the test cap shown in Figure 11 is inserted and then on the empty lampholder.

The switch, if any, is placed in the "on" position.

If metal foil is used for the test on the empty lampholder, it shall also be in contact with the metal screw shell if this shell has to be insulated from the contacts.

The insulation resistance shall be not less than:

– *2 MΩ for the measurement according to item a);*

– *4 MΩ in all other cases.*

Immediately after the insulation resistance test, an AC voltage of substantially sine wave form, with a frequency of 50 Hz or 60 Hz and with an r.m.s. value of (2 U + 1 000) V (where U is the rated voltage) is applied for 1 min between the points prescribed. For enclosed and unenclosed reinforced insulated lampholders, the test voltage shall be determined from Table 10.2 of IEC 60598-1. Additionally, for switched lampholders, this voltage ~~is~~ shall be applied between live parts of different polarity and other metal parts with the switch both closed and open.

The electric strength test voltage between live parts of different polarity for lampholders E5 and E10 with a rated voltage not exceeding 60 V is reduced to 500 V.

IECNORM.COM : Click to view the full PDF of IEC 60238:2016 RLV

Initially, not more than half the prescribed voltage is applied, it is then raised rapidly to the full value.

No flashover or breakdown shall occur during the test.

The high-voltage transformer used for the test shall be so designed that, when the output terminals are short-circuited after the output voltage has been adjusted to the appropriate test voltage, the output current is at least 200 mA.

The overcurrent relay shall not trip when the output current is less than 100 mA.

Care is taken that the r.m.s. value of the test voltage applied is measured within ±3 %.

Glow discharges without drop in voltage are neglected.

16 Mechanical strength

16.1 Lampholders shall have adequate mechanical strength and shall withstand the strain due to the insertion of a lamp as well as that caused by the screwing of the lampholder to a conduit.

Compliance is checked by the tests of 16.2 to 16.7.

~~NOTE~~ With the exception of candle lampholders, brackets or similar devices for the mounting or attachment of lampholders are not covered by the requirements of Clause 16. The mechanical strength of such devices shall comply with the requirements of the standard for the equipment for which the lampholder is intended.

16.2 The mechanical strength of the outer shell, the screw shell and the dome is checked by screwing a test cap (see Figures 13, 14 and 15) into the specimen, the following torque being applied for 1 min:

– 0,3 Nm for lampholders E5;
– 0,3 Nm for lampholders E10;
– 0,5 Nm for candle lampholders E14, when the lampholder is fixed by the threaded entry;
– 1,2 Nm for candle lampholders E14, when the lampholder is clamped by the outer shell;
– 1,2 Nm for other lampholders E14;
– 2 Nm for lampholders E27;
– 4 Nm for lampholders E40.

The test cap dimensions are as specified in Table 9.

Table 9 – Test cap dimensions

Lampholder	Dimension S [a] mm	Diameter of central contact mm
E14	5,5	4,8
E27	9,5	9,5
E40	11,0	14,0
[a] For the meaning of dimension S, see Figures 13, 14 or 15.		

IECNORM.COM : Click to view the full PDF of IEC 60238:2016 RLV

The dimensions of the test caps for lampholders E5 and E10 are under consideration. For the time being, the test is carried out with a cap having the same dimensions as the cap of the lamp for which the lampholder is designed.

The test is made twice: first with the specimen clamped at the outer shell and secondly with the specimen fixed by the threaded entry, dome or backplate, according to type of lampholder.

At the end of the test, the specimen shall not show any change impairing its normal use.

16.3 The dome or backplate of the specimen is fixed and a torque as indicated under 16.2 is applied to the outer shell for 1 min so as to tighten the screwed connection between shell and dome.

This test shall cause neither loosening of the connection between shell and dome nor any other damage.

The test does not apply to lampholders E5 and E10.

16.4 *The dome of threaded entry lampholders is fixed to a brass conduit in the normal way, the set-screws being tightened with a torque equal to the values indicated in Table 12. The locking of the screwed entry is tested by the application for 1 min of a torque as indicated under 16.2, but in an anti-clockwise direction.*

The application of this torque shall not loosen the threaded entry from the brass conduit.

If, however, the threaded entry loosens, the set-screw is further tightened with the smallest torque necessary to prevent the entry from loosening during this test, and this minimum value is noted.

NOTE It is practical to increase the torque by increments of about 20 % during this test.

The minimum value of the torque applied is noted for the purpose of the test of 17.1.

~~NOTE~~ For the tests under 16.2 to 16.4, the use of an apparatus according to Figure 6 is recommended.

16.5 The strength of the connection between dome and threaded entry is checked as indicated in Figure 12.

The specimen is fixed by the threaded entry in a horizontal position. A mandrel with a thread having the maximum IEC dimensions acceptable for caps, and with other dimensions according to Figure 12, is screwed into the lampholder and is loaded for 1 min with a mass, as indicated in Figure 12. The end of the mandrel shall not sag more than 5 mm.

The specimen shall not be damaged. If a permanent deformation occurs, the specimen is forced into the original position and the test is repeated five times, after which the specimen shall show no damage impairing its normal use.

This test does not apply to candle lampholders.

16.6 The mechanical strength of the outer shell of insulating material with or without a conductive outer surface and of insulating rings between the screw shell and the exterior of metal lampholders is checked by means of the pendulum hammer test specified in IEC 60068-2-75 (see Figure 8), subject to the following details (see 3.9 of IEC 60068-2-75:2014).

IECNORM.COM : Click to view the full PDF of IEC 60238:2016 RLV

a) Method of mounting:

The specimen shall be held against the plywood sheet of the mounting fixture in such a manner that its axis is horizontal and parallel to the support and its outer edge touches the plywood.

NOTE For lampholders different from the cylindrical shape, the condition of the axis parallel to the plywood sheet ~~may~~ can be obtained by adequate pine wood shimmings.

b) Height of fall:

The striking element shall fall from one of the heights given in Table 10.

Table 10 – Heights of fall

Material	Height of fall mm
Ceramic parts	100 ± 1
Parts made of other material	150 ± 1,5

Candle lampholders, if tested without decorative covers, shall, however, be tested with a height of fall of 100 mm.

c) Number of impacts:

Four blows shall be applied to points equally divided over the circumference of the outer edge of the shell and of the ring.

For lampholders of insulating material, the outer shell shall be hit at the outer edge. For metal lampholders, the outer shell shall be hit at the position of the insulating ring between the screw shell and the exterior.

For such candle lampholders as prescribed in b), one blow shall be applied in two places at 90° on the circumference. The blows shall be applied at 5 mm from the outer edge of the lampholder.

d) Pre-conditioning:

Not applicable.

e) Initial measurements:

Not applicable.

f) Attitudes and impact locations:

See c) above.

g) Operating mode and functional monitoring:

The sample shall not operate during impact.

h) Acceptance and rejection criteria:

After the test, the sample shall show no serious damage within the meaning of this standard, in particular

1) live parts shall not have become accessible.

Damage to the lampholder which does not reduce creepage distances or clearances below the values specified in Clause 18 and small chips which do not adversely affect the protection against electric shock or ingress of water shall be ignored;

2) cracks not visible to the naked eye and surface cracks in fibre-reinforced mouldings and the like shall be ignored.

Cracks or holes in the outer surface of any part of the lampholder shall be ignored if the lampholder complies with this standard even if that part is omitted.

i) Recovery:

Not applicable.

j) Final measurements:

IECNORM.COM : Click to view the full PDF of IEC 60238:2016 RLV

See h) above.

The mechanical strength of lampholders E5 and E10 shall be checked by means of the free fall test specified in IEC ~~60068-2-75~~ 60068-2-32:1975.

The lampholder E5 or E10 shall withstand, without damage affecting safety, 50 falls of 500 mm onto a 3 mm thick steel plate in the tumbling barrel (see Figure 7) turning at 5 r/min (that is 10 falls per minute).

NOTE The mechanical strength of lampholders used in luminaires or other equipment ~~may~~ can be checked by means of the spring hammer specified in IEC 60068-2-75. In IEC 60598-1, the test impact energy used varies from 0,2 Nm to 0,7 Nm depending on component material and luminaire type.

~~**15.6.1**~~ Additionally, for lampholders provided with a snap-on outer shell the following tests are carried out.

A push and a pull force along the lampholder axis is applied for 1 min. to the outer shell by means of a mass of 5 kg.

After this test the outer shell shall have remained in its intended position.

Additionally it shall not be possible to remove the outer shell by use of the standard fingertip, applied in all possible positions, with a force of 30 N.

16.7 *For metal lampholders the mechanical strength of external metal parts (outer shell and dome) is tested by means of an apparatus according to Figure 9.*

The various parts are tested on the complete lampholder. Each part is subjected twice for 1 min to a pressure as indicated in Table 11; the pressure is applied on two diameters at right angles to each other. The test is not made on outer shells and domes of insulating material with a conductive outer surface.

During and after the test, the deformation of the specimen shall not exceed the values indicated in Table 11.

Table 11 – Maximum deformation values

Lampholder	Pressure	Maximum deformation	
		During the test	After the test
	N	mm	mm
E14	75	1	0,3
E27	100	2	0,3
E40	100	4	0,5

This test does not apply to lampholders E5 and E10 and similar small lampholders.

16.8 Entry spouts and glands shall withstand the mechanical stresses occurring during normal fitting and use.

Compliance is checked by the following test.

Screwed glands are fitted with a cylindrical metal rod having a diameter equal to the nearest whole number of millimetres below the internal diameter of the packing. The glands are then tightened by means of a suitable spanner, a force of 30 N for metal glands, or 20 N for glands of moulded material, being applied for 1 min, at a radius of 25 cm.

IECNORM.COM : Click to view the full PDF of IEC 60238:2016 RLV

At the end of the test, the glands, the spouts and the enclosures shall show no damage.

16.9 Backplate lampholders shall be designed to withstand fixing to a support without damage.

Compliance is checked by the following test.

The backplate of the lampholder is fixed by means of 4 mm screws to a rigid flat steel sheet. This sheet has two drilled and tapped holes at a distance equal to the distance between the axes of the fixing holes of the backplate. The screws are gradually tightened, the maximum torque applied being 1,2 Nm.

The backplate of lampholders shall be fixed by means of screws to a rigid flat steel sheet as follows:

– *3 mm screws for lampholders E10;*
– *4 mm screws for lampholders other than E10.*

The screws shall be gradually tightened, the maximum torque applied being:

– *0,5 Nm for 3 mm screws, and*
– *1,2 Nm for 4 mm screws.*

These requirements do not apply to lampholders E5.

For backplate lampholders specifically intended for building-in, this test is carried out with the means of attachment specified by the manufacturer.

After this test, the backplate lampholder shall show no damage impairing its further use.

17 Screws, current-carrying parts and connections

17.1 Screws and mechanical connections, the failure of which might cause the holder to become unsafe, shall withstand the mechanical stresses occurring in normal use.

Compliance is checked by inspection and by the following test.

NOTE 1 Screwed connections are already partially checked by the tests of Clause 16.

Screws and nuts which may be operated when connections are made to the lampholders are tightened and loosened

– *five times for screws operating in a female thread in metal;*
– *ten times for screws operating in a female thread in insulating material*

by means of a suitable test screwdriver applying a torque as indicated in Table 12, except for set-screws tightened with an increased torque during the test of 16.4 when the increased torque is applied. Column 1 applies to screws without heads if the screw, when tightened, does not protrude from the hole. Column 2 applies to other screws. Screws operating in a female thread in insulating material are each time completely removed and reinserted.

The test shall cause no damage impairing the further use of the screwed connections.

IECNORM.COM : Click to view the full PDF of IEC 60238:2016 RLV

Table 12 – Torque values

Nominal diameter of screw mm	Torque Nm	
	1	**2**
Up to and including 2,8	0,2	0,4
Over 2,8 up to and including 3,0	0,25	0,5
Over 3,0 up to and including 3,2	0,3	0,6
Over 3,2 up to and including 3,6	0,4	0,8
Over 3,6 up to and including 4,1	0,7	1,2
Over 4,1 up to and including 4,7	0,8	1,8
Over 4,7 up to and including 5,3	0,8	2,0
Over 5,3 up to and including 6,0	–	2,5
Over 6,0 up to and including 8,0	–	8,0
Over 8,0 up to and including 10,0	–	17,0
Over 10,0 up to and including 12,0	–	29,0
Over 12,0 up to and including 14,0	–	48,0
Over 14,0 up to and including 16,0	–	114,0
NOTE Column 1 applies to screws without heads if the screw, when tightened, does not protrude from the hole. Column 2 applies to other screws.		

NOTE 2 Screws to be operated when connections are made to the holder include, for example, screws for fixing covers when they have to be loosened for making connections, etc. Conduit thread connections and screws to fasten the holders to their supports are excluded.

The shape of the blade of the test screwdriver shall suit the slot of the screw to be tested. The screw shall not be tightened in jerks.

17.2 In the case of screws operating in a thread in insulating material, the length of the thread shall be not less than 3 mm plus one-third of the nominal screw diameter, except that this length need not exceed 8 mm.

Correct introduction of the screw into the thread shall be ensured.

Compliance is checked by inspection, by measurement and by a manual test.

NOTE The requirement with regard to the correct introduction is met if introduction of the screw in a slanting manner is prevented, for example by guiding the screw by the part to be fixed, by a recess in the female thread or by the use of a screw with the leading thread removed.

17.3 Electrical connections shall be so designed that contact pressure is not transmitted through insulating material other than ceramic, unless there is sufficient resiliency in the metal parts to compensate for any possible shrinkage of the insulating material.

Screws shall not be of a metal which is soft or liable to creep, such as zinc or aluminium.

Screws transmitting contact pressure and screws with a nominal diameter of less than 3 mm which may be operated when connections are made to the lampholder, shall screw into a metal nut or metal insert; locking screws are excepted from this requirement.

Compliance is checked by inspection.

IECNORM.COM : Click to view the full PDF of IEC 60238:2016 RLV

17.4 Screws and rivets, which serve as electrical as well as mechanical connections, shall be locked against loosening.

Compliance is checked by inspection and by a manual test.

NOTE 1 Spring washers ~~may~~ can provide satisfactory locking. For rivets, a non-circular shank or an appropriate notch ~~may~~ can be sufficient for locking.

NOTE 2 Sealing compound which softens on heating provides satisfactory locking only for screw connections not subject to torsion during normal use.

17.5 Current-carrying parts shall be of copper, an alloy containing at least 50 % copper or material having characteristics at least equivalent.

This requirement does not apply to screws which do not essentially contribute to the current conduction such as terminal screws.

Compliance is checked by inspection and, if necessary, by chemical analysis.

The tests of Clauses 19 and 22 will show whether current-carrying parts are equivalent to copper in respect to current-carrying capacity, mechanical strength and corrosion likely to be met in normal service.

~~NOTE~~ Special care should be taken with regard to corrosion and mechanical properties.

18 Creepage distances and clearances

18.1 Creepage distances and clearances shall be not less than the values shown in Tables 13a and 13b, the lampholder being fitted as in normal use and a lamp being inserted into or removed from the lampholder.

The central contact of the lamp cap shall have a diameter of

– 2,4 mm for lampholders E5;
– 3,8 mm for lampholders E10;
– 5,5 mm for lampholders E14;
– 10,5 mm for lampholders E27;
– 16,0 mm for lampholders E40.

The movement of any floating part shall be so limited as to prevent a decrease of creepage distances or clearances below the specified values.

~~NOTE 1~~ The distances specified in Table 13a apply to impulse withstand category II, the distances specified in Table 13b apply to impulse withstand category III in accordance ~~to~~ with IEC 60664-1 ~~and~~. Both tables refer to pollution degree 2, where normally only non-conductive pollution occurs but occasionally a temporary conductivity caused by condensation ~~must~~ is to be expected.

NOTE 1 IEC 60664-1 gives information on distances for other impulse withstand categories and higher pollution degrees.

~~NOTE 2~~ Attention is drawn to the fact that the values for creepage distance and clearance given in Clause 18 are the absolute minimum.

NOTE 2 The voltages shown in Tables 13a and 13b are ~~working~~ rated voltages, not ignition voltages.

IECNORM.COM : Click to view the full PDF of IEC 60238:2016 RLV

Table 13a – Minimum distances for AC (50/60 Hz) sinusoidal voltages: Impulse withstand category II

Distances mm	~~Working~~ Rated voltage V			
	50	**150**	**250**	**500** [b]
1 Between live parts of different polarity, and				
2 Between live parts and external metal parts, if not covered with insulating material: (this includes screws of backplate lampholders)				
Basic insulation				
– Creepage distances: insulation PTI ≥ 600 [a]	0,6	0,8	1,5	3
PTI < 600 [a]	1,2	1,6	2,5	5
– Clearances [b]	0,2	0,8	1,5	3
Reinforced insulation				
– Creepage distances: insulation PTI ≥ 600 [a]	–	1,6	3	6
PTI < 600 [a]	–	3,2	5	6
– Clearances	–	1,6	3	6
3 Clearances for backplate lampholders [c] – between live parts of different polarity, and – between live parts and the boundary of the space for the supply wires in backplate lampholders not specifically intended for building in:	0,6	0,8	1,5	3

[a] PTI means Proof Tracking Index, in accordance with IEC 60112:2003/AMD1:2009.

In the case of creepage distances to parts not energized or not intended to be earthed, where no tracking can occur, the values specified for material with PTI ≥ 600 apply for all materials (~~in spite~~ independent of the real PTI).

For creepage distances subjected to working voltages of less than 60 s duration, the values specified for materials with PTI ≥ 600 apply for all materials.

For creepage distances not liable to contamination by dust or moisture, the values specified for material with PTI ≥ 600 apply (independent of the real PTI).

[b] Clearances between live parts and a non-live screw shell in an empty lampholder (unscrewed lamp) shall not be less than 2 mm.

[c] These values take account of possible unevenness of the mounting surface.

NOTE Values for creepage distances and clearances ~~may~~ can be found for intermediate values of ~~working~~ rated voltages by linear interpolation between tabulated values. No values are specified for ~~working~~ rated voltages below 25 V as the voltage test of 15.4 is considered sufficient.

IECNORM.COM : Click to view the full PDF of IEC 60238:2016 RLV

Table 13b – Minimum distances for AC (50/60 Hz) sinusoidal voltages: Impulse withstand category III

Distances mm	~~Working~~ Rated voltage V			
	50	**150**	**250**	**500** [b]
1 Creepage distances and clearances between live parts of different polarity	0,6	0,8	1,5	3
2 Between live parts and external metal parts, if not covered with insulating material: (this includes screws of backplate lampholders)				
Creepage distances:				
insulation PTI ≥ 600 [a]	0,6	1,5	3	4
PTI < 600 [a]	1,2	1,6	3	5
Clearances [b]	0,2	1,5	3	4
3 Clearances for backplate lampholders [c] – between live parts of different polarity, and – between live parts and the boundary of the space for the supply wires in backplate lampholders not specifically intended for building in:	0,6	1,5	3	4

[a] PTI means Proof Tracking Index, in accordance with IEC 60112:2003/AMD1:2009.

In the case of creepage distances to parts not energized or not intended to be earthed, where no tracking can occur, the values specified for material with PTI ≥ 600 apply for all materials (in spite of the real PTI).

For creepage distances subjected to working voltages of less than 60 s duration, the values specified for materials with PTI ≥ 600 apply for all materials.

For creepage distances not liable to contamination by dust or moisture, the values specified for material with PTI ≥ 600 apply (independent of the real PTI).

[b] Clearances between live parts and a non-live screw shell in an empty lampholder (unscrewed lamp) shall not be less than 2 mm.

[c] These values take account of possible unevenness of the mounting surface.

NOTE Values for creepage distances and clearances ~~may~~ can be found for intermediate values of ~~working~~ rated voltages by linear interpolation between tabulated values. No values are specified for ~~working~~ rated voltages below 25 V as the voltage test of 15.4 is considered sufficient.

NOTE 3 Information on standard ratings for specific holder types is given in Clause 6.

~~NOTE~~ Metal locking devices (see 10.3) for the coupling between outer shell and dome are considered as follows:

– if the locking device forms part of the centre contact, the clearances in item 1) of Table 13a or Table 13b apply;
– if the locking device forms part of the side contact(s), footnote b of Table 13a or Table 13b applies;
– if the locking device is a separate part, it shall only be taken into account in so far as it shortens any other required distance.

Table 14 – Minimum distances for non-sinusoidal pulse voltages

Rated pulse voltage (peak kV)	2	2,5	3	4	5	6	8
Minimum clearance (mm)	1	1,5	2	3	4	5,5	8

IECNORM.COM : Click to view the full PDF of IEC 60238:2016 RLV

For distances subjected to both sinusoidal voltages and non-sinusoidal pulse voltages, the minimum required distance shall not be less than the highest value indicated in Tables 13a or 13b or 14.

Creepage distances shall be not less than the required minimum clearance.

Minimum creepage distances and clearances between live parts of different polarity shall be reduced to 1 mm for lampholders E5 and to 2 mm (for PTI < 600) for lampholders E10 intended for series connected lamps (maximum rated voltage 25 V for lampholders E5 and 60 V for lampholders E10).

Compliance is checked by measuring with and without supply wires of the largest cross-sectional area according to 11.1 connected to the terminals.

18.2 Sealing compound shall not protrude above the edge of the cavity.

Compliance is checked by inspection.

19 Normal operation

Normal use shall cause no excessive wear or other harmful effect.

Insulation and protection against accidental contact shall not be seriously affected. Linings, barriers and the like shall have adequate mechanical strength and shall be reliably fixed.

Temperature rise and vibration to be expected in normal use shall not cause loosening of electrical connections.

Compliance is checked by the following test.

The specimen shall be placed in a test apparatus as shown in Figure 4. A corresponding test cap, according to Figure 5 shall be screwed in and out 100 times at a rate of about 15 times per minute.

The lampholder shall be fixed during half the number of operations by the threaded entry, dome or backplate according to the type of lampholder, and during the other half clamped at the outer shell.

The test cap (see Figures 13, 14 and 15) is screwed in with a torque of

- *0,4 Nm for candle lampholders E14;*
- *1 Nm for lampholders E14;*
- *1,5 Nm for lampholders E27;*
- *3 Nm for lampholders E40.*

At the end of the test, the specimen shall show

- *no wear impairing its operation;*
- *no damage impairing protection against electric shock;*
- *no loosening of electrical contacts;*
- *no loosening of the connection between shell and dome;*
- *no loosening of the set screw locking the threaded entry.*

Finally the specimen shall comply with the requirements of 9.2 and shall withstand an electric strength test according to 15.4, the test voltage being 500 V lower in each case.

IECNORM.COM : Click to view the full PDF of IEC 60238:2016 RLV

NOTE The moisture treatment of Clause 15 is not repeated before this voltage test.

These requirements do not apply to lampholders E5 and E10.

20 General resistance to heat

20.1 Lampholders shall be sufficiently resistant to heat.

Compliance is checked by the tests of 20.2 to 20.4.

20.2

– *For E27 lampholders:*

The lampholder is first checked by means of the gauges according to the current edition of standard sheets 7006-22C and 7006-22D of IEC 60061-3.

After these tests, a solid steel (preferably stainless steel) test cap complying with Figure 14 is screwed into the lampholder, mounted according to its intended use, with a torque of 1,5 Nm. The lampholder, with the test cap screwed in, is then placed in a vertical holder-up position (because the weight of the test cap shall not bear on the holder), in a heating cabinet having a temperature of approximately 85 °C.

This temperature is raised to 175 °C within 1 h ± 15 min. For lampholders which form an integral part of the luminaire, this temperature is replaced by that one measured according to the operating conditions given in 12.4.2 of IEC 60598-1, plus 10 K, with a tolerance of ±5 °C.

After reaching and maintaining this temperature, the lampholder is loaded for 48 h with a current equal to the rated current of the lampholder.

After this period, the lampholder is removed from the heating cabinet and allowed to cool down for 24 h without the test cap.

The tests with gauges 7006-22C and 7006-22D of IEC 60061-3 are then repeated.

The lampholder shall still comply with these gauges.

– *For E14 lampholders:*

A solid steel (preferably stainless steel) test cap B complying with Figure 13 is screwed into a candle lampholder E14, mounted according to its intended use, with a torque of 0,4 Nm and into all other lampholders E14 with a torque of 1 Nm. The lampholder, with test cap B screwed in, is then placed in a vertical holder-up position (because the weight of the test cap shall not bear on the holder), in a heating cabinet having a temperature of approximately 70 °C. This temperature is raised to 145 °C within 1 h ± 15 min. For lampholders which form an integral part of the luminaire, this temperature is replaced by that one measured according to the operating conditions given in 12.4.2 of IEC 60598-1, plus 10 K, with a tolerance of ±5 °C.

After reaching and maintaining this temperature, the lampholder is loaded for 48 h with a current equal to the rated current of the lampholder.

After this period, the lampholder is removed from the heating cabinet and allowed to cool down for 24 h without the test cap.

A solid brass cap A complying with Figure 13 is then screwed into the lampholder with the same torque and then unscrewed. This sequence of operations is performed 10 times, after which the contact resistance between the terminals of the lampholder is measured.

This measurement is made at the rated current of the lampholder, in an AC circuit of not more than 6 V; for switched lampholders the contact resistance in the switch is neglected. The measured contact resistance shall not exceed 0,02 Ω.

NOTE 1 Test cap A is carefully cleaned and polished before being screwed into the lampholder for the contact resistance measurement.

IECNORM.COM : Click to view the full PDF of IEC 60238:2016 RLV

– *For E27 and E14 lampholders:*

T-marked lampholders shall be tested at the marked temperature plus 10 °C.

Lampholders intended for use in refrigerators and food freezers shall be tested at the upper value of the rated operating temperature plus 10 °C.

NOTE 2 The value of 10 °C is being studied and is temporarily kept in line with the present requirements for E27 lampholders.

These requirements do not apply to lampholders E5, E10 and E40.

20.3 Contacts and all other current-carrying parts shall be so constructed as to prevent excessive temperature rise.

Compliance is checked by the following test which shall be made immediately after the test of 20.2 on the lampholder in whose terminals conductors of the maximum cross-sectional area according to 11.1 are fitted.

The terminal screws are tightened with a torque equal to two-thirds of the torque specified in 17.1; the lampholder is placed with the open end downwards and loaded for 1 h with 1,25 times its rated current.

The temperature rise of terminals shall not exceed 45 K.

This temperature is determined with the aid of melting particles or by thermocouples, not by means of thermometers.

For this test, a special test cap shown in Figure 11 is used.

After the test, it is verified that, as required in 11.4, the conductors are not damaged.

NOTE Pellets of beeswax (diameter 3 mm, melting temperature 65 °C) ~~may~~ can be used as melting particles provided that the ambient temperature equals 20 °C.

These requirements do not apply to lampholders E5 and E10 with a rated voltage not exceeding 60 V.

20.4 The resistance to heat is then tested in a heating cabinet at the temperature indicated in Table 15.

Table 15 – Heating cabinet temperatures

Lampholder	Temperature °C
E10 general	75
E5 and E10 integral part of luminaire [a]	75 or measured temperature + 15 (whichever is the highest)
E14	170
E27	200
E40	260
[a] For E5, E10 and similar small lampholders which form an integral part with the luminaire such as Christmas tree lighting chains, the temperature is measured in the luminaire on the lamp cap at a distance of 2 mm from the lamp glass-to-cap junction.	

T-marked lampholders are tested at the marked temperature plus 35 K.

Lampholders intended for use in refrigerators and food freezers are tested:

a) at the rated minimum temperature, and

IECNORM.COM : Click to view the full PDF of IEC 60238:2016 RLV

b) at the rated operating temperature plus 35 K.

In case of a) the duration of the test shall be reduced to 16 h.

Immediately after this test, the lampholders shall once more be subjected to the test of 16.6.

A solid steel (preferably stainless steel) test cap complying with Figure 13 (test cap B), 14 or 15 is screwed fully home in the lampholder. The lampholder with the test cap screwed in is then placed in a vertical holder-up position (because the weight of the test cap shall not bear on the holder), in a heating cabinet having approximately half the temperature specified in Table 15. This temperature is raised to the required test temperature within 1 h ± 15 min. Following this, the test is continued for 168 h without interruption.

The test temperature is maintained with a tolerance of ±5 K.

During the test, the lampholder shall not undergo any change impairing its further use especially in the following respects:

- *reduction of the protection against electric shock;*
- *loosening of electrical contacts;*
- *cracks, swelling or shrinking;*
- *sealing compound flowing out.*

The test cap is removed from the lampholder after cooling down to approximate room temperature.

At the end of the test, it is checked if the Edison threads are not deformed. The test is made by means of the "Go" gauges shown in the current edition of standard sheets 7006-25 or 7006-25A of IEC 60061-3, as appropriate.

In addition, the holder shall withstand the mechanical strength tests made under the conditions specified in 16.2 and 16.6, the torque, however, being reduced to 50 % of the original value and the height of fall being reduced to 5 cm, respectively.

Sealing compound shall not flow to such an extent that live parts are exposed; a mere displacement of the compound is neglected.

This test is not made on integral lampholders.

21 Resistance to heat, fire and tracking

21.1 Parts retaining the contacts and external parts of lampholders of insulating material and of lampholders comprising external parts of insulating material with a conductive outer surface shall be resistant to heat.

For material other than ceramic, compliance is checked with the aid of the ball-pressure test by means of the apparatus shown in Figure 10.

All the tests required by Clause 21 of this standard are not performed on lampholders which are integral with a luminaire, as similar tests are required in Clause 13 of IEC 60598-1. However, the operating conditions of these tests will take into account those specific to lampholders and defined in Clause 21 of this standard.

For lampholders E5 and E10, only the parts retaining the contacts are subjected to the ball-pressure test.

IECNORM.COM : Click to view the full PDF of IEC 60238:2016 RLV

The surface of the part under test is placed in the horizontal position and a steel ball of 5 mm diameter is pressed against this surface with a force of 20 N.

The test is made in a heating cabinet at a temperature shown in 20.4, except for lampholders E5 and E10, where the temperature is 125 °C.

The test load and the supporting means are placed in the heating cabinet for a sufficient time to ensure that they have attained the stabilized testing temperature before the test commences.

The part to be tested is placed in the heating cabinet for a period of 1 h, before the test load is applied.

If the surface under test bends, the part where the ball presses is supported. For this purpose, if the test cannot be made on the complete specimen, a suitable part may be cut from it.

The specimen shall be at least 2,5 mm thick, but if such a thickness is not available on the specimen then two or more pieces are placed together.

After 1 h, the ball is removed from the specimen which is then immersed within 10 s in cold water for cooling down to approximately room temperature. The diameter of the impression caused by the ball is measured and shall not exceed 2 mm.

NOTE In the event of curved surfaces, such as lampholder shells, the shorter axis is measured if the indent is elliptical.

In case of doubt, the depth of the impression is measured and the diameter ø calculated using the formula: $ø = 2\sqrt{p(5-p)}$, where p is the depth of impression.

21.2 External parts of insulating material (outer shell, screw shell, dome or backplate) providing protection against electric shock, and parts of insulating material (terminal/contact assembly) retaining live parts or extra-low voltage (ELV) parts in position, shall be resistant to flame and ignition.

For materials other than ceramic, compliance is checked by the test of 21.3 or 21.4.

Screw shells which are only live when a lamp is inserted into the lampholder are not deemed to be live parts ~~within~~ for the ~~meaning~~ purpose of this requirement.

Insulating material retaining such shells in place is therefore checked by the test of 21.3.

21.3 External parts of insulating material, including those with a conductive exterior, providing protection against electric shock, and parts of insulating material retaining ELV parts in position, are subjected to the glow-wire test in accordance with IEC 60695-2-11:2014, subject to the following details.

– *The specimen is a complete holder. It may be necessary to take away parts of the holder to perform the test, but care should be taken to ensure that the test conditions are not significantly different from those occurring in normal use.*

– *The specimen is mounted on the carriage and pressed against the glow-wire tip with a force of 1 N, preferably 15 mm or more from the upper edge, into the centre of the surface to be tested. The penetration of the glow-wire into the specimen is mechanically limited to 7 mm.*

If it is not possible to make the test on a specimen as described above because the specimen is too small, the above test is made on a separate specimen of the same material, 30 mm × 30 mm square and with a thickness equal to the smallest thickness of the specimen.

IECNORM.COM : Click to view the full PDF of IEC 60238:2016 RLV

– *The temperature of the tip of the glow-wire is 650 °C.*

After 30 s the specimen is withdrawn from contact with the glow-wire tip. The glow-wire temperature and heating current are constant for 1 min prior to commencing the test. Care should be taken to ensure that heat radiation does not influence the specimen during this period. The glow-wire tip temperature is measured by means of a sheathed fine wire thermocouple constructed and calibrated as described in IEC 60695-2-11:2014.

– *Any flame or glowing of the specimen shall extinguish within 30 s of withdrawing the glow-wire and any flaming drops of the material shall not ignite a piece of tissue paper, as specified in definition 4.187 of ISO 4046-4:2002, spread out horizontally 200 mm ± 5 mm below the specimen.*

21.4 Parts of insulating material retaining live parts or ELV lamp contacts in position are subjected to the needle-flame test in accordance with IEC ~~60695-2-2~~ 60695-11-5, subject to the following details.

– *The specimen is a complete lampholder. It may be necessary to take away parts of the lampholder to perform the test (for example contacts, which would otherwise shield the area to be tested), but care should be taken to ensure that the test conditions are not significantly different from those occurring in normal use.*

– *The test flame is applied to the centre of the surface to be tested.*

– *The duration of application is 10 s.*

– *Any self-sustaining flame shall extinguish within 30 s of removal of the gas flame and any flaming drops of the material shall not ignite a piece of tissue paper, spread out horizontally 200 mm ± 5 mm below the specimen.*

NOTE For additional information see the explanatory sheet, Figure 18.

21.5 For drip-proof lampholders, insulating parts retaining live parts or ELV parts in position shall have adequate resistance to tracking.

For materials other than ceramic, compliance shall be checked by the proof tracking test in accordance with IEC 60112:2003/AMD1:2009, subject to the following details.

– *If the specimen has no flat surface of at least 15 mm × 15 mm, the test may be carried out on a flat surface with reduced dimensions provided drops of liquid do not flow off the specimen during the test.*

  No artificial means should, however, be used to retain the liquid on the surface. In case of doubt, the test may be made on a separate strip of the same material, having the required dimensions and manufactured by the same process.

– *If the thickness of the specimen is less than 3 mm, two specimens, or more if necessary, should be stacked to obtain a thickness of at least 3 mm.*

– *The test shall be made at three places of the specimen or on three specimens.*

– *The electrodes shall be of platinum, and test solution A~~, as described~~ specified in 7.3 of IEC 60112:2003/AMD1:2009 shall be used.*

– *For drip-proof lampholders the specimen shall withstand 50 drops without failure at a test voltage of PTI 175.*

– *A failure has occurred if a current of 0,5 A or more flows for at least 2 s in a conducting path between the electrodes on the surface of the specimen, thus operating the overcurrent relay, or if the specimen burns without releasing the overcurrent relay.*

– *Clause 9 of IEC 60112:2003/AMD1:2009 regarding determination of erosion, does not apply.*

~~– Note 1 to clause 3 of IEC 60112, regarding surface treatment, does not apply.~~

IECNORM.COM : Click to view the full PDF of IEC 60238:2016 RLV

22 Resistance to excessive residual stresses (season cracking) and to rusting

22.1 Contacts and other parts of rolled sheets of copper or copper alloy whose failure might cause the lampholder to become unsafe shall not be damaged due to excessive residual stresses.

Compliance is checked by the following test.

The surface of the specimens is carefully cleaned, varnish being removed by acetone, and grease and finger prints by petroleum spirit or the like.

The specimens are placed for 24 h in a test cabinet, the bottom of which is covered by an ammonium chloride solution having a pH value of 10 (for details of the test cabinet, the test solution and the test procedure, see Annex A).

After this treatment, the specimens are washed in running water; 24 h later they shall show no cracks when inspected at an optical magnification of 8×.

Cracks which may occur in very restricted areas of the outer shell of metal lampholders near the fixing areas of the insulating ring shall not be considered.

~~NOTE~~ In order not to influence the results of the test, the specimens should be handled with care.

22.2 Ferrous parts, the rusting of which may endanger the safety of the lampholder, shall be adequately rust protected.

Compliance is checked by the following test.

All grease is removed from parts to be tested by immersion in a suitable degreasing agent for 10 min. The parts are then immersed for 10 min in a water solution of 10 % ammonium chloride at a temperature of 20 °C ± 5 °C.

Without drying, but after shaking off drops of water, the parts are placed for 10 min in a box containing air saturated with moisture at a temperature of 20 °C ± 5 °C.

After the parts have been dried for 10 min in a heating cabinet at a temperature of 100 °C ± 5 °C, any traces of rust on sharp edges and any yellowish film may be removed by rubbing, after which their surface shall show no signs of rust.

For small helical springs and the like, and for ferrous parts exposed to abrasion, a layer of grease is deemed to provide sufficient rust protection.

Such parts are not subjected to the test.

IECNORM.COM : Click to view the full PDF of IEC 60238:2016 RLV

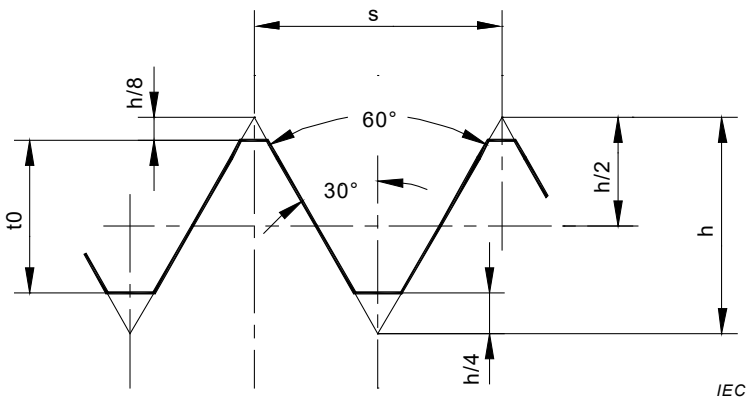

h = 0,866 03 s
h/4 = 0,216 51 s
h/8 = 0,108 25 s
t0 = 5/8h = 0,541 27 s

Basic profile [a]

Design profile for the nut

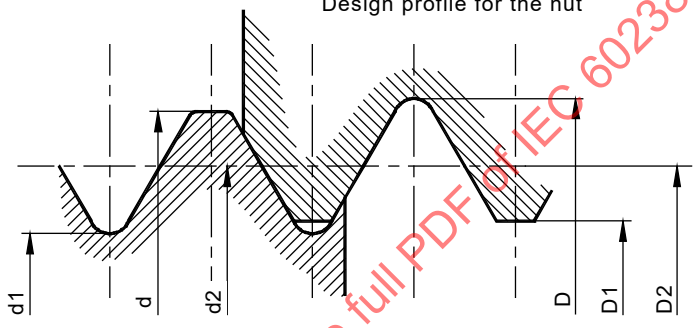

Design profile for the screw

IEC

Dimensions in millimetres

Designation	s	Screw					Nut				
		d		d2		d1	D	D2		D1	
		Max.	Min.	Max.	Min.	Max.	Min.	Max.	Min.	Max.	Min.
M8×1	1	8,000	7,800	7,350	7,238	6,917	8,000	7,462	7,350	7,117	6,917
M10×1	1	10,000	9,800	9,350	9,238	8,917	10,000	9,462	9,350	9,117	8,917
M13×1	1	13,000	12,800	12,350	12,190	11,917	13,000	12,510	12,350	12,117	11,917
M16×1	1	16,000	15,800	15,350	15,190	14,917	16,000	15,510	15,350	15,117	14,917

[a] The basic profile is the profile to which the deviations defining the limits of the external and the internal threads are applied.

Figure 1a –Nipple thread for lampholders: metric thread.
Basic profile and design profile for the nut and for the screw

IECNORM.COM : Click to view the full PDF of IEC 60238:2016 RLV

h = 0,960 491 s
h/6 = 0,160 082 s
t0 = 2/3h = 0,640 327 s
r = 0,137 329 s

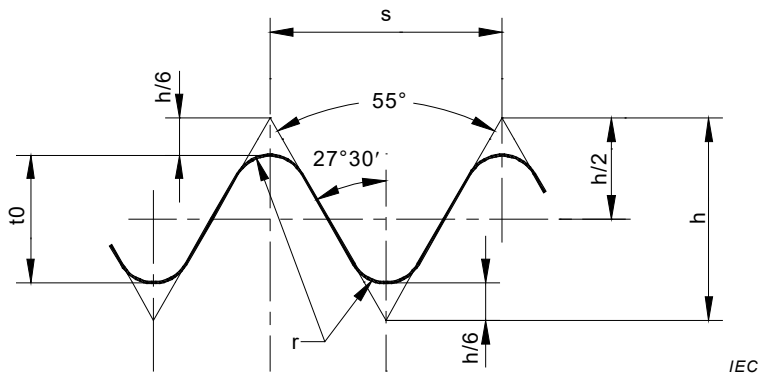

Basic profile [a]

Design profile for the nut

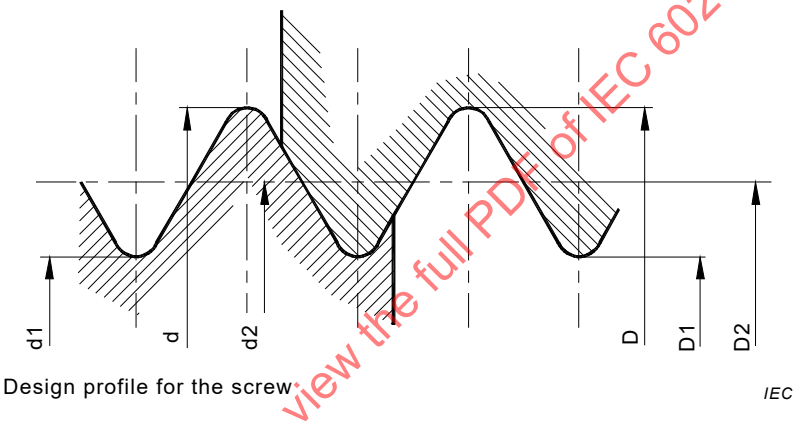

Design profile for the screw

Dimensions in millimetres

Designation	n[a]	Screw					Nut				
		d		d2		d1	D	D2		D1	
		Max.	Min.	Max.	Min.	Max.	Min.	Max.	Min.	Max.	Min.
G3/8A	19	16,662	16,412	15,806	15,681	14,950	16,662	15,931	15,806	15,395	14,50

[a] Number of threads per inch.

[a] The basic profile is the profile to which the deviations defining the limits of the external and the internal threads are applied.

Figure 1b –Nipple thread for lampholders: ISO standard pipe thread. Basic profile and design profile for the nut and for the screw

IECNORM.COM : Click to view the full PDF of IEC 60238:2016 RLV

Gauges for the screw

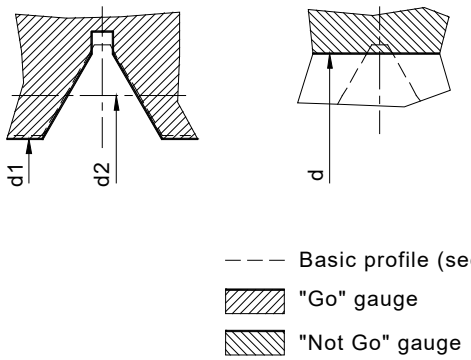

Dimensions in millimetres

Designation	s	d		d2		d1		Wear
		Value	Tolerance	Value	Tolerance	Value	Tolerance	
M10×1	1	9,800	+0,004 –0,004	9,350	–0,012 –0,020	8,917	+0,004 –0,004	0,012
M13×1	1	12,800	+0,004 –0,004	12,350	–0,012 –0,020	11,917	+0,004 –0,004	0,012
M16×1	1	15,800	+0,004 –0,004	15,350	–0,012 –0,020	14,917	+0,004 –0,004	0,012
NOTE The tolerances in column d2 are deliberately positioned both on the same side of the dimension to safeguard a no-man's-land.								

Gauges for the nut

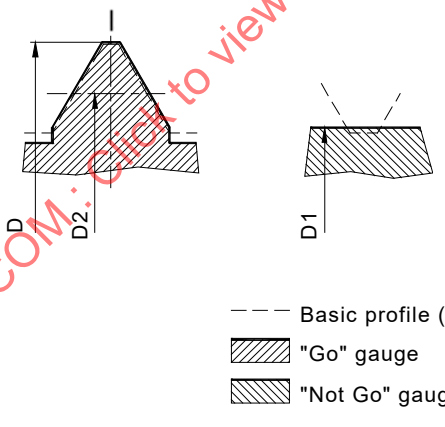

Dimensions in millimetres

Designation	s	D		D2		D1		Wear
		Value	Tolerance	Value	Tolerance	Value	Tolerance	
M10×1	1	10,000	+0,004 –0,004	9,350	+0,012 +0,020	9,117	+0,004 –0,004	0,012
M13×1	1	13,000	+0,004 –0,004	12,350	+0,012 +0,020	12,117	+0,004 –0,004	0,012
M16×1	1	16,000	+0,004 –0,004	15,350	+0,012 +0,020	15,117	+0,004 –0,004	0,012
NOTE The tolerances in column D2 are deliberately positioned both on the same side of the dimension to safeguard a no-man's-land.								

Figure 2a – Gauges for metric ~~ISO~~ thread for nipples

IECNORM.COM : Click to view the full PDF of IEC 60238:2016 RLV

Gauges for the screw

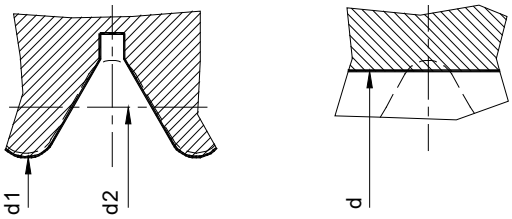

— — — Basic profile (see Figure 1b)

"Go" gauge

"Not Go" gauge

IEC

Dimensions in millimetres

Designation	n[a]	d		d2		d1		Wear
		Value	Tolerance	Value	Tolerance	Value	Tolerance	
G3/8A	19	16,412	+0 –0,008	15,806	+0 –0,020	14,950	+0 –0,018	–

[a] Number of threads per inch.

Gauges for the nut

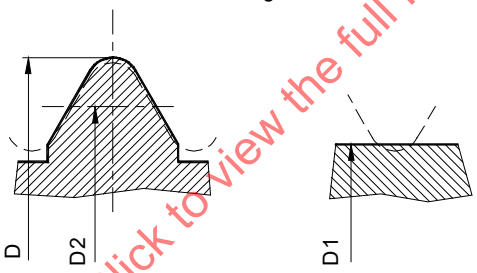

— — — Basic profile (see Figure 1b)

"Go" gauge

"Not Go" gauge

IEC

Dimensions in millimetres

Designation	n[a]	D		D2		D1		Wear
		Value	Tolerance	Value	Tolerance	Value	Tolerance	
G3/8A	19	16,662	+0,018 –0,005	15,806	+0,005 +0,028	15,395	+0,008 –0	0,005

[a] Number of threads per inch.

Figure 2b – Gauges for ISO standard pipe thread for nipples

IECNORM.COM : Click to view the full PDF of IEC 60238:2016 RLV

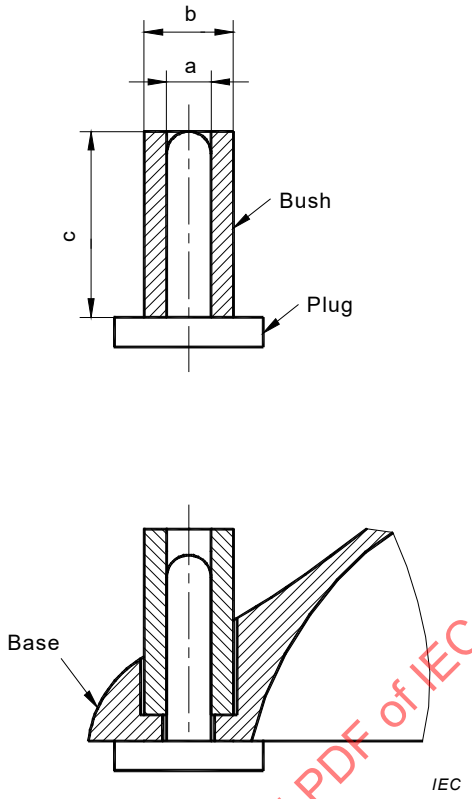

Dimensions in millimetres

Reference	Dimension	Tolerance	
		Manufacture	Wear
a	4,1	+0,03 –0,0	+0,0 –0,03
b	8,2	+0,03 –0,0	+0,0 –0,03
c	18	+0,1 –0,1	– –

Figure 3 – Gauge for holes for backplate lampholder screws

IECNORM.COM : Click to view the full PDF of IEC 60238:2016 RLV

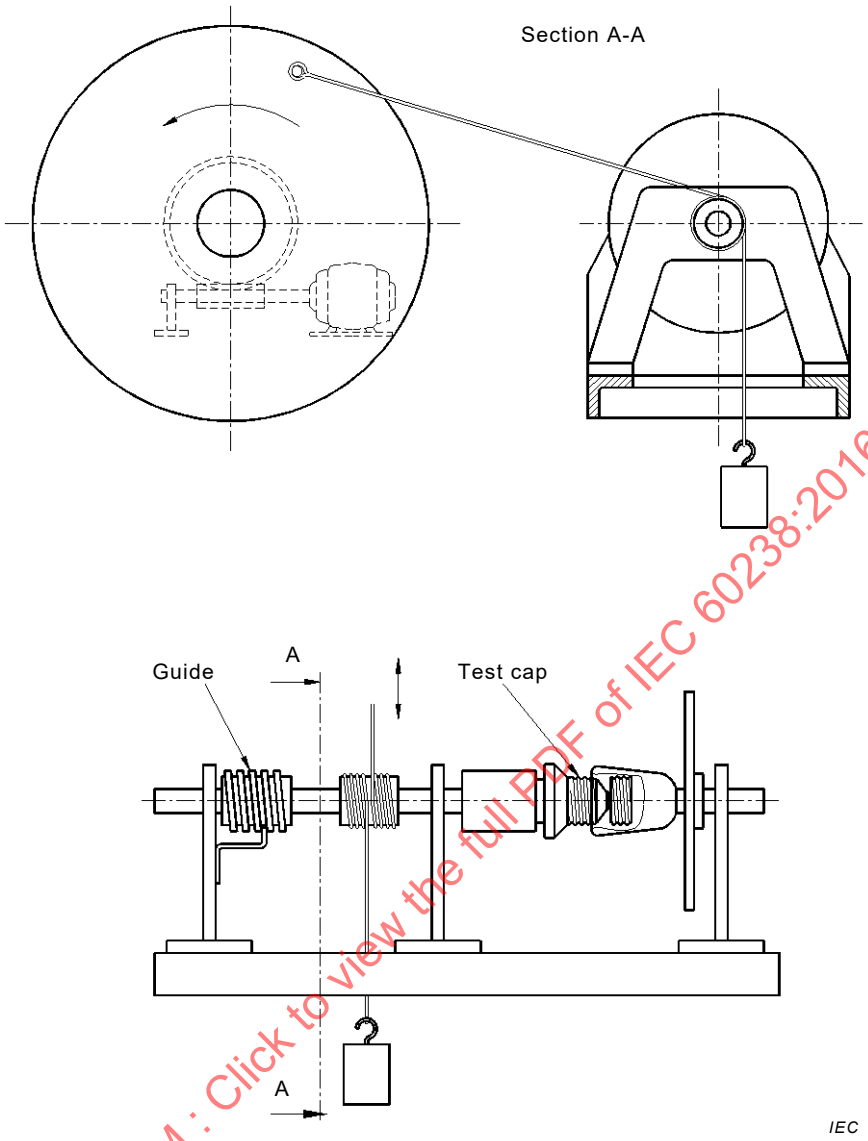

Figure 4 – Normal operation test apparatus

IECNORM.COM : Click to view the full PDF of IEC 60238:2016 RLV

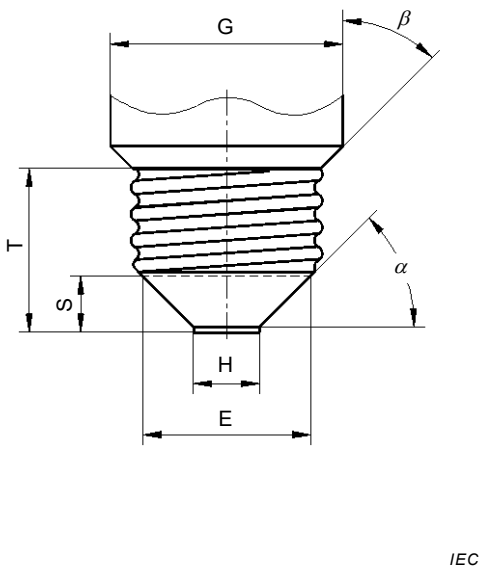

Figure 5a – Test cap E14/E27

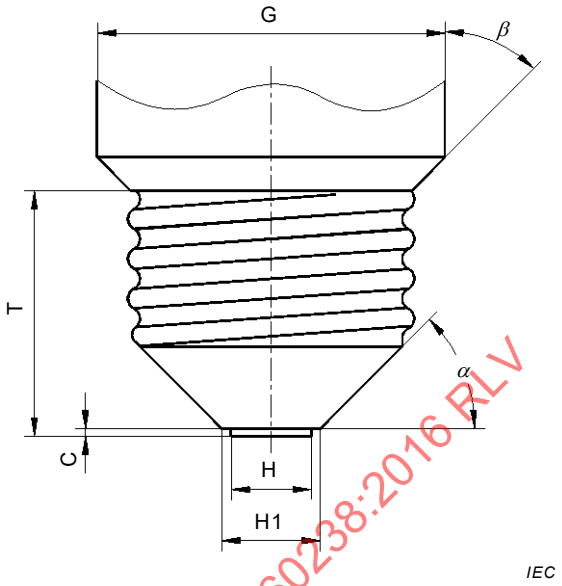

Figure 5b – Test cap E40

Material: Hardened steel

~~NOTE~~ The dimensions of the thread on the test cap shall be between the maximum and minimum values specified for E14, E27 and E40 caps in standard sheets 7004-23, 7004-21 and 7004-24 of IEC 60061-1, respectively.

Dimensions in millimetres

Lampholder	C	E	G	H	H1	S	T	α	β
E14 E27 E40	– – 0,5	12 23 –	17 32 50	4,8 9,5 14	– – 17	4 7,7 –	17 23 35	45° 45° 45°	45° 45° 45°
Tolerance	+0,1 –0,1	– –	+0,5 –0,5	+0,1 –0,1	+0,1 –0	+0,1 –0	+0,1 –0,1	+30′ –30′	+1° –1°

Figure 5 – Test caps for the test of Clause 18

IECNORM.COM : Click to view the full PDF of IEC 60238:2016 RLV

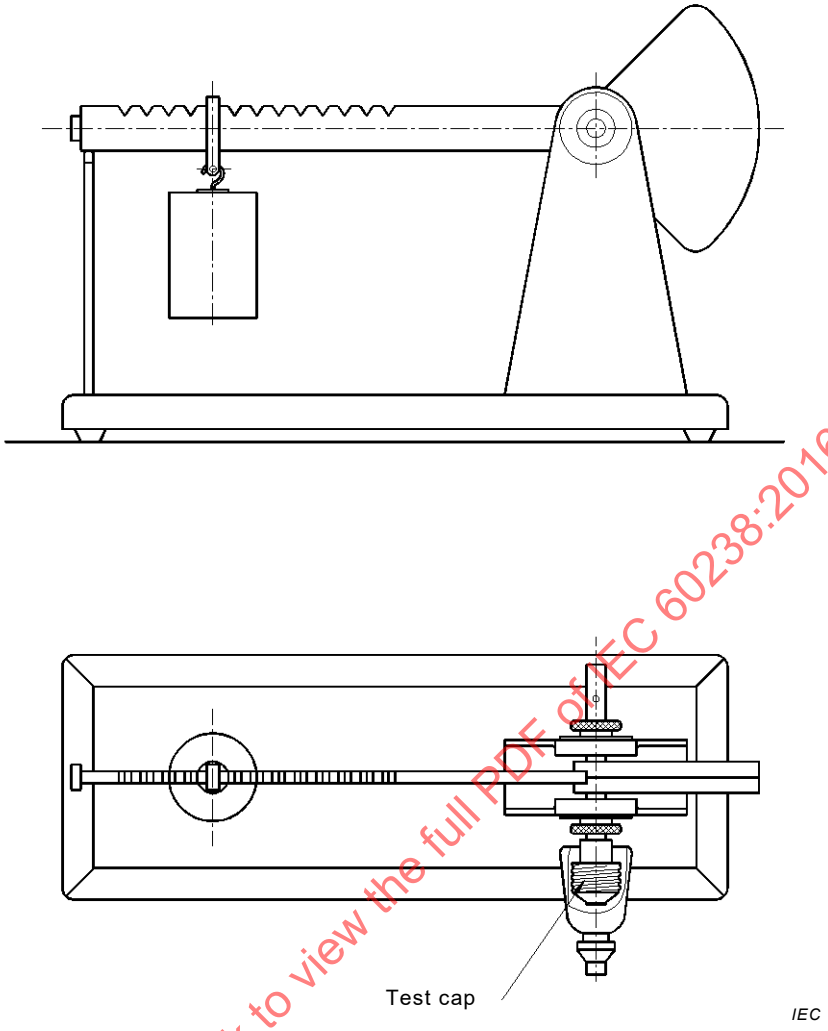

Figure 6 – Torque apparatus

IECNORM.COM : Click to view the full PDF of IEC 60238:2016 RLV

Dimensions in millimetres (unless otherwise indicated)

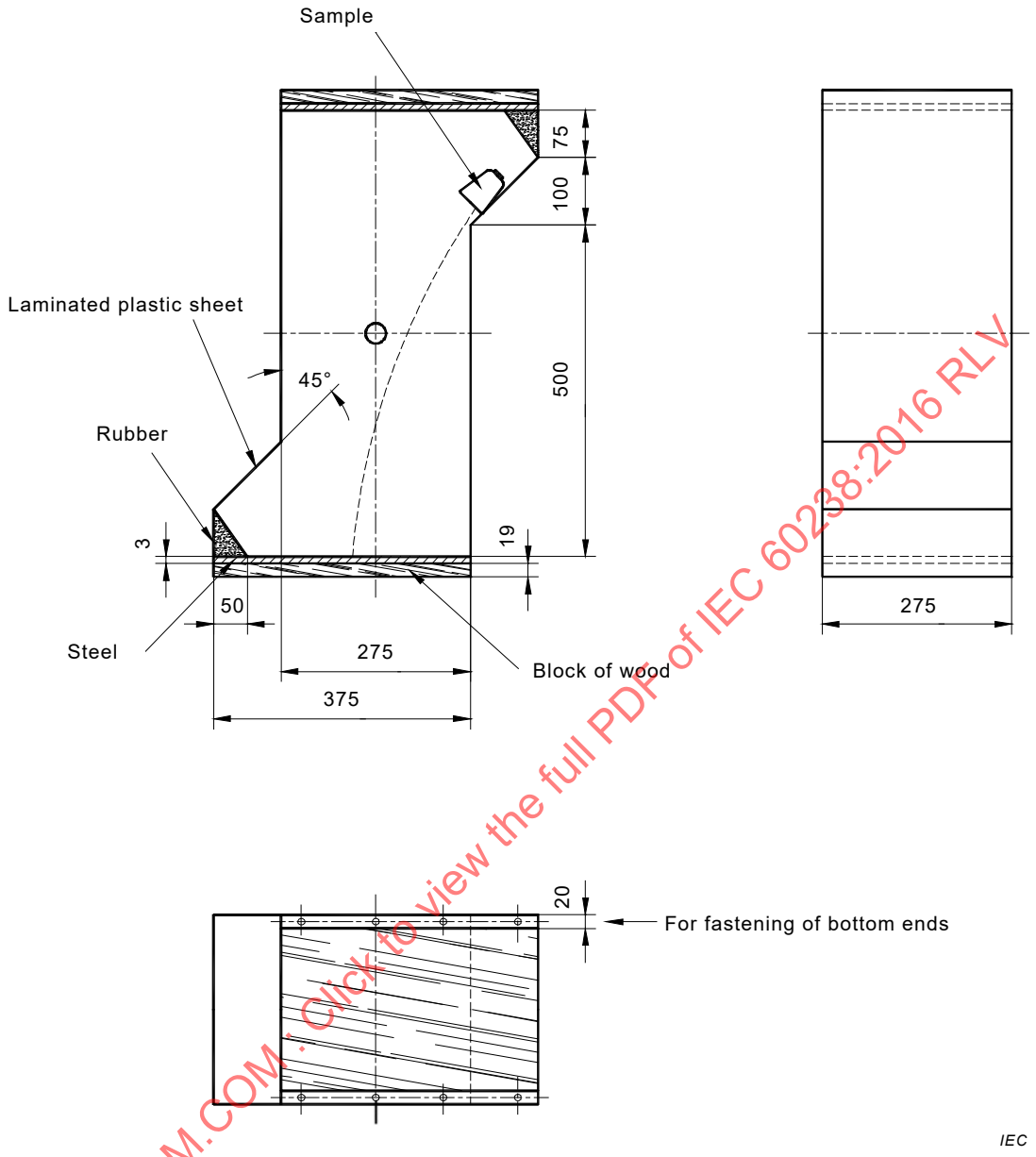

The body of the tumbling barrel shall be made of steel sheet of 1,5 mm thickness.

The compartments where the sample rests between individual falls shall be backed by a rubber part made of chip-resistant rubber with a hardness of 80 IRHD and the sliding surfaces of these parts shall be made of laminated plastic sheet[3].

The tumbling barrel shall be provided with an aperture with lid made of transparent acrylic.

The shaft of the tumbling barrel shall not protrude into the barrel itself.

Figure 7 – Tumbling barrel

[3] Formica® is an example of a suitable product available commercially. This information is given for the convenience of users of this document and does not constitute an endorsement by IEC of this product.

IECNORM.COM : Click to view the full PDF of IEC 60238:2016 RLV

Dimensions in millimetres

NOTE For information, this drawing has been retained in this standard, although there is a basic standard.

In case of doubt regarding the drawing, refer to IEC 60068-2-75.

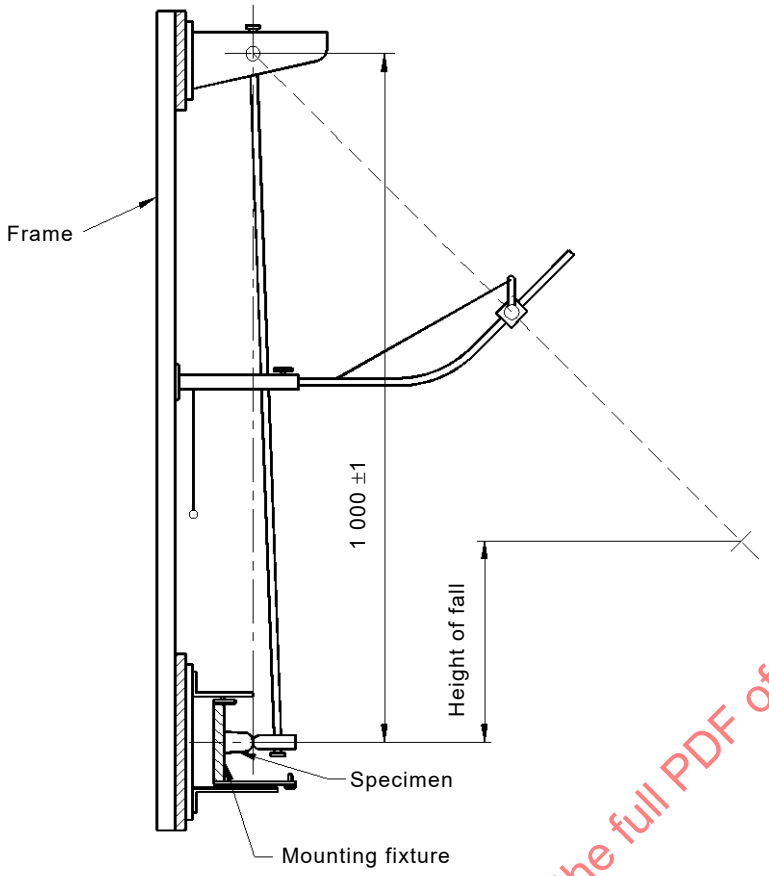

IEC

Figure 8a – Impact-test apparatus

Dimensions in millimetres (unless otherwise indicated)

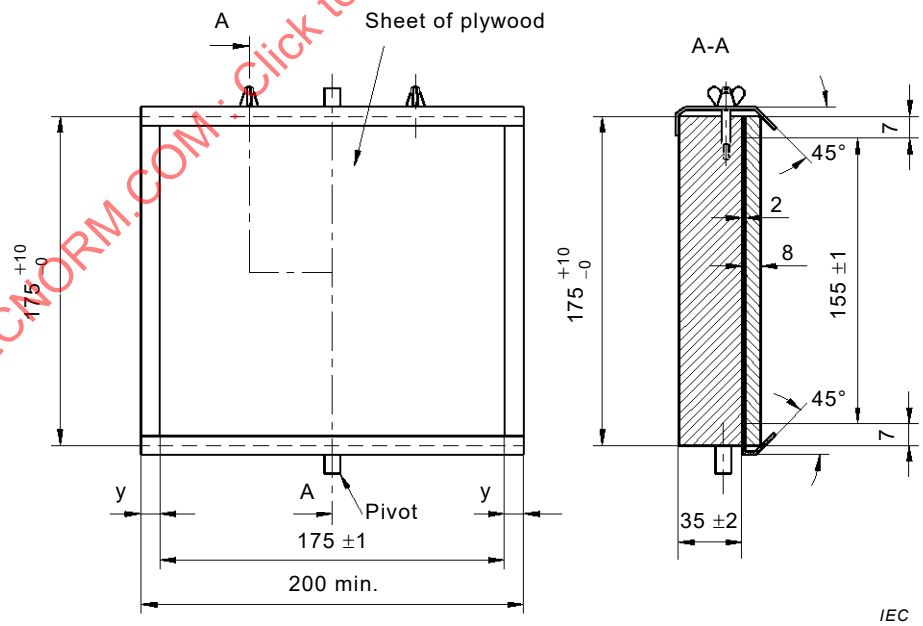

IEC

NOTE For information this drawing has been retained in this standard, although there is a basic standard. In case of doubt regarding the drawing, refer to IEC 60068-2-75.

Figure 8b – Mounting support

Figure 8 – Impact-test apparatus

IECNORM.COM : Click to view the full PDF of IEC 60238:2016 RLV

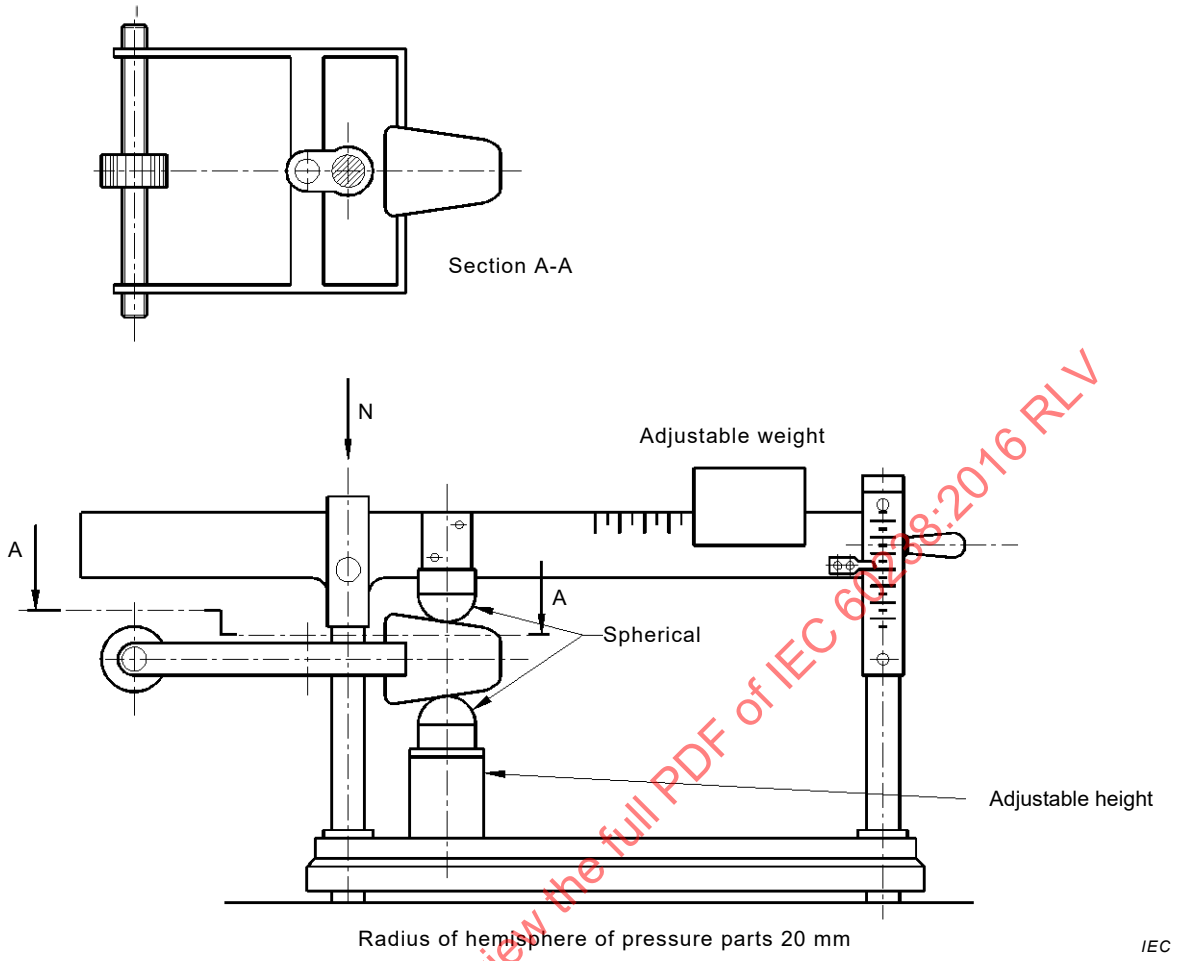

Figure 9 – Pressure apparatus

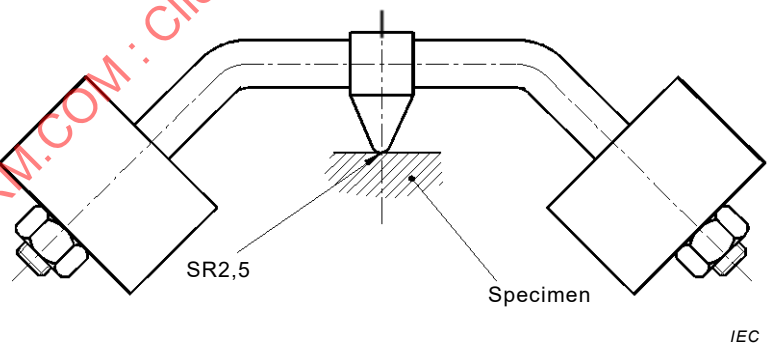

Figure 10 – Ball-pressure test apparatus

IECNORM.COM : Click to view the full PDF of IEC 60238:2016 RLV

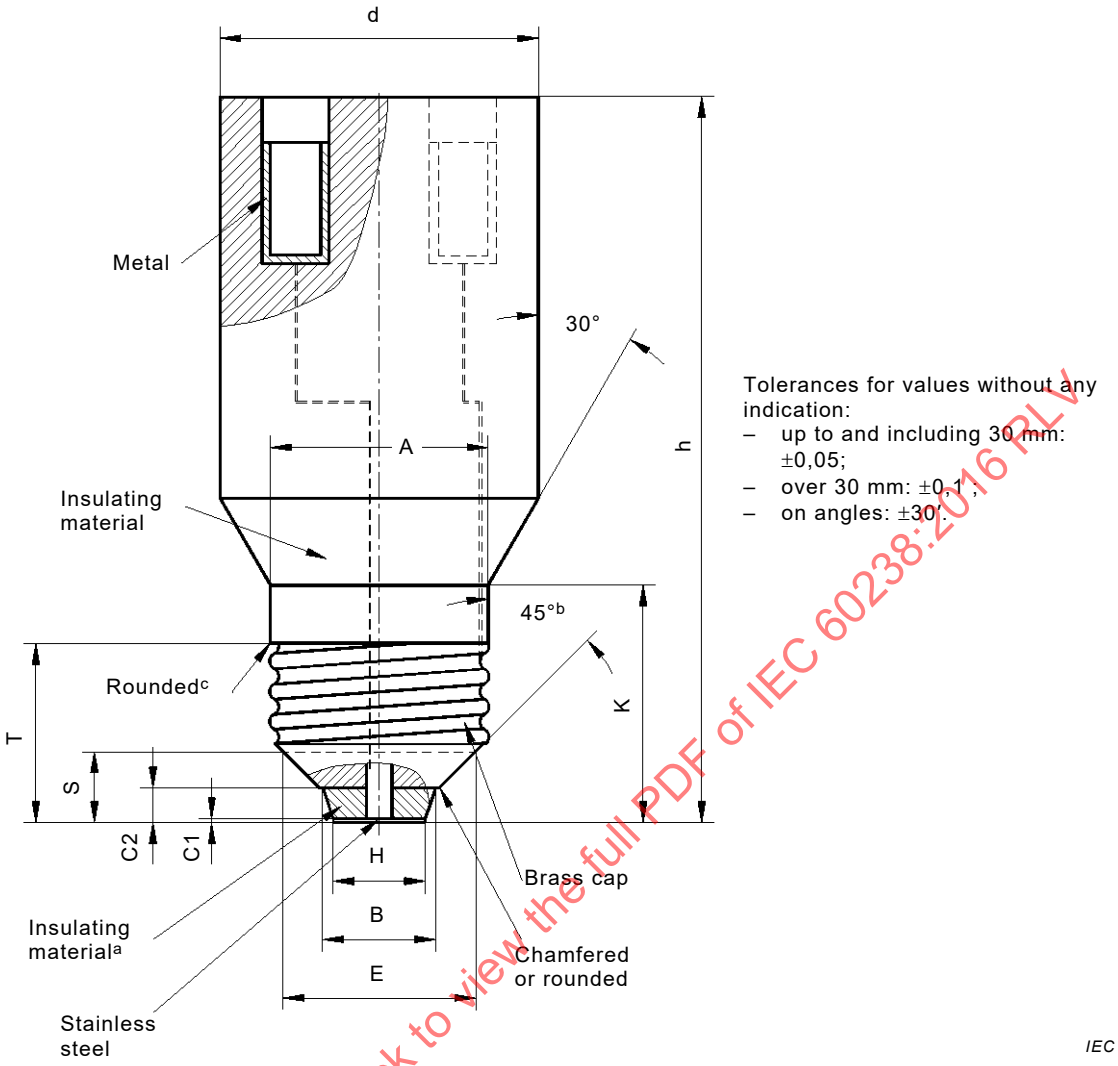

[a] The insulating material shall be such that it is dimensionally stable, easy to shape and having a PTI of 600; PTFE, for example, is a suitable material.

[b] Refers to the metal part only; not applicable to test cap E10.
The dimensions of the thread on the test cap shall be between the maximum and minimum values specified for E10, E14, E27 and E40 caps in standard sheets 7004-22, 7004-23, 7004-21 and 7004-24 of IEC 60061-1, respectively. The inner diameter of the brass cap shall be 2 mm less than the dimension d1 indicated on the relevant standard sheet. The cross-sectional area of the conductors shall be 0,75, 1,5, 1,5 and 4,0 mm^2 for E10, E14, E27 and E40, respectively. The conductors shall be rigid (solid or stranded).

[c] For the E14 test cap, a 45° chamfer is required on the cylindrical portion of the gauge.

NOTE Values for E5 lampholders are under consideration.

Dimensions in millimetres

Lampholder	d	h	B	C1	C2	H	S	E	T min.	K min.	A max.
E10	18	60	6	0,5	2,5	4	–	–	9,5	19	13
E14	38	80	9,5	0,5	3,8	6,2	4,5	12	16	27,2	17,1
E27	38	80	13,5	0,5	4,2	11,5	8,5	23	21,5	28,3	26,1
E40	55	100	25	1	8	18	10[a]	34[a]	34	47,8	39

[a] In case of lampholders E40, dimensions S and E are only needed for the design of the gauges.

Figure 11 – Test cap for the tests of 15.4 and 20.3

IECNORM.COM : Click to view the full PDF of IEC 60238:2016 RLV

Dimensions in millimetres

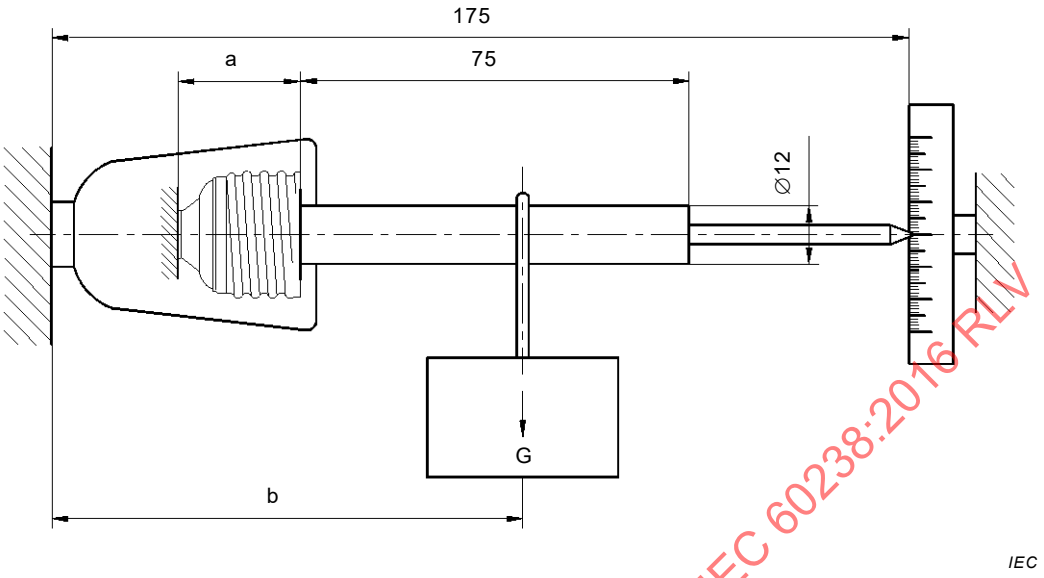

Lampholder	a	b	G kg
E14 E27 E40	19 25 37	100 100 140	1 2 3

Figure 12 – Bending apparatus

IECNORM.COM : Click to view the full PDF of IEC 60238:2016 RLV

Dimensions in millimetres (unless otherwise indicated)

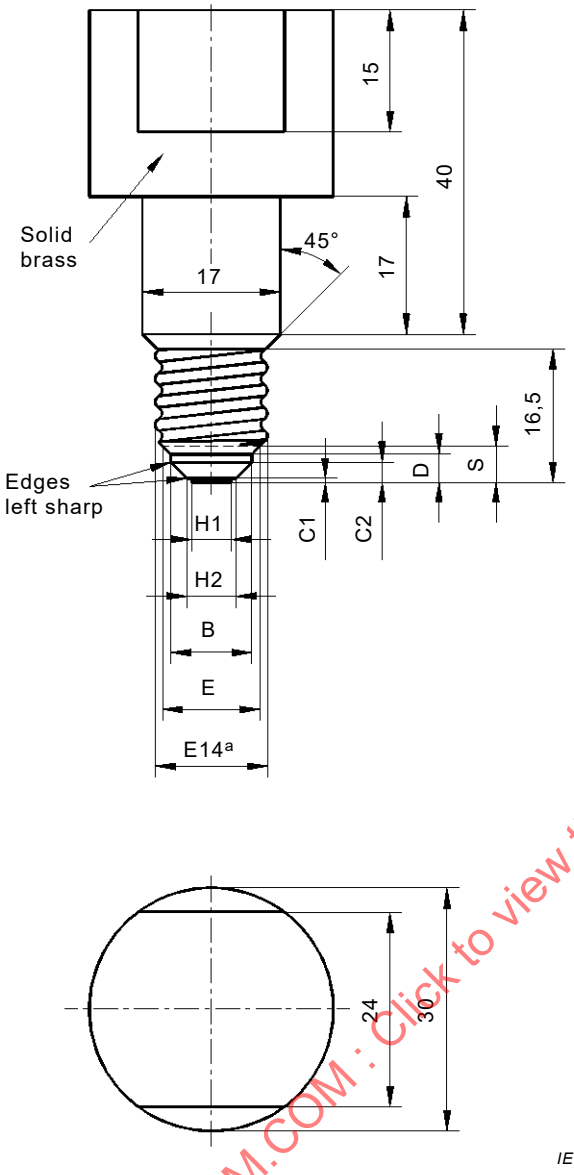

Figure 13a – Test cap A

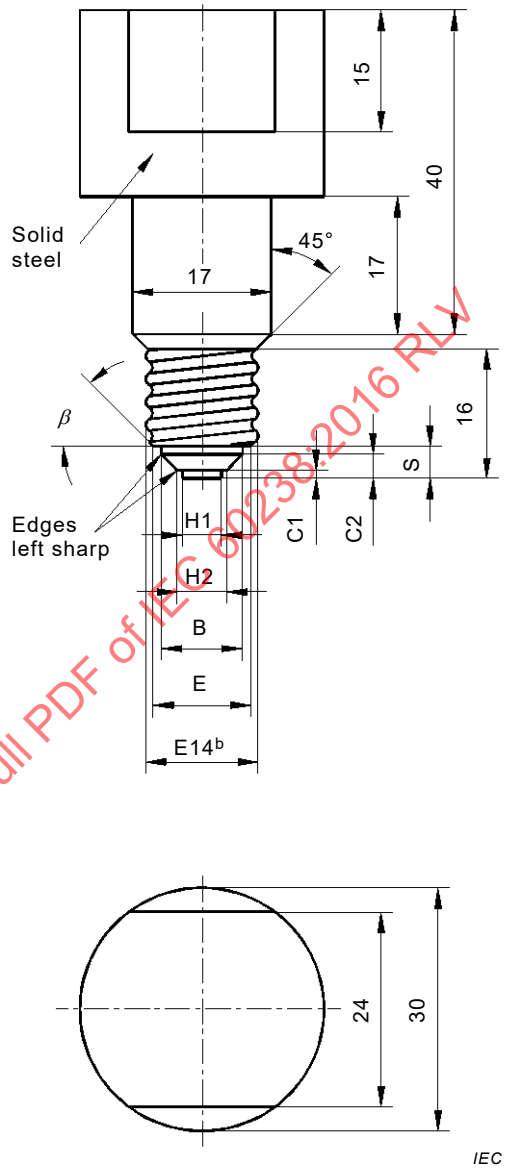

Figure 13b – Test cap B

[a] The dimensions of the thread on test cap A shall be between the maximum and minimum values specified in standard sheet 7004-23 of IEC 60061-1.

[b] The dimensions of the thread on test cap B shall be the minimum values, with a tolerance of ±0,05 mm, specified in standard sheet 7004-23 of IEC 60061-1.

Figure 13 *(1 of 2)*

IECNORM.COM : Click to view the full PDF of IEC 60238:2016 RLV

Dimensions in millimetres (unless otherwise indicated)

Reference	Dimensions		Tolerances	
	Test cap A	Test cap B	Test cap A	Test cap B
C1	0,5	1,0	+0,0 –0,1	+0,0 –0,1
C2	2,5	3,0	+0,0 –0,1	+0,0 –0,1
D	3,5	–	+0,1 –0,0	–
S	4,5	4,0	+0,06 –0,0	+0,0 –0,06
H1	4,8	4,8	+0,04 –0,04	+0,04 –0,04
H2	6	6	+0,04 –0,04	+0,04 –0,04
B	10	10	+0,04 –0,0	+0,06 –0,0
E	12	12	–	–
β	–	45°	–	+10′ –10′

Figure 13 – Test cap A and test cap B for lampholders E14 *(2 of 2)*

IECNORM.COM : Click to view the full PDF of IEC 60238:2016 RLV

Dimensions in millimetres (unless otherwise indicated)

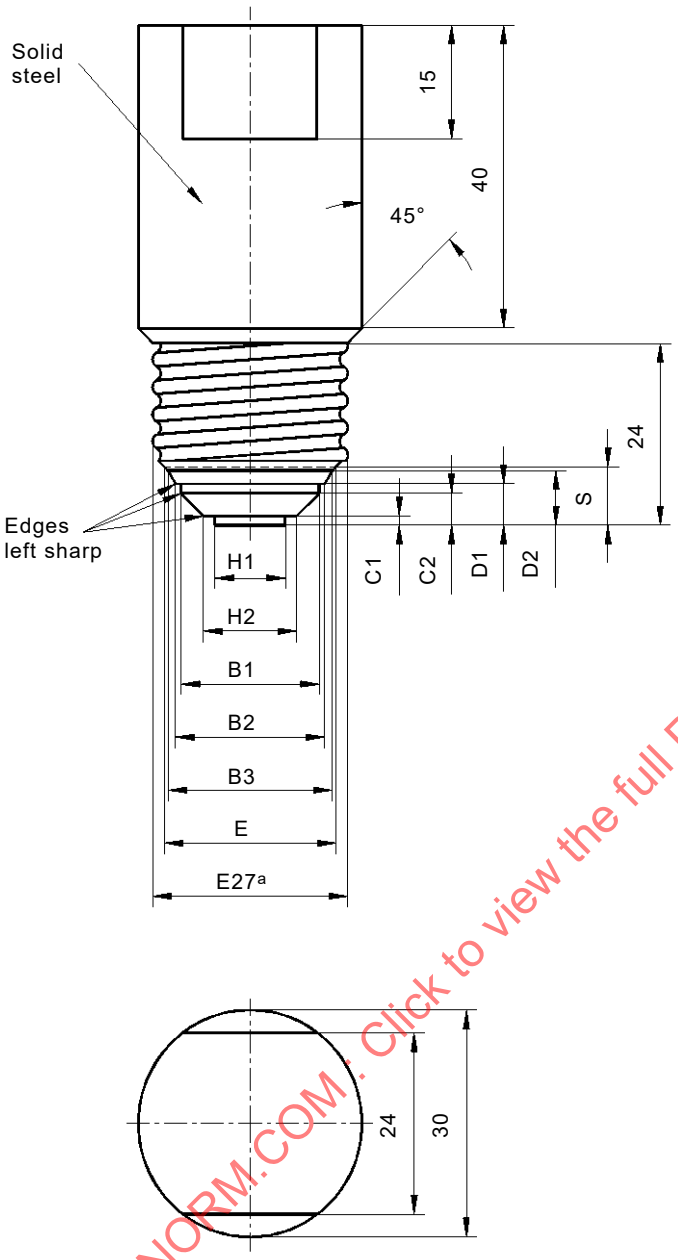

Reference	Dimension	Tolerance
C1	1,2	+0,0 −0,04
C2	4,2	+0,0 −0,06
D1	5,45	+0,1 −0,0
D2	7,2	+0,1 −0,0
S	7,7	+0,0 −0,04
H1	9,5	+0,04 −0,04
H2	12,5	+0,04 −0,04
B1	18,5	+0,06 −0,0
B2	20	+0,06 −0,0
B3	22	+0,06 −0,0
E	23	–

[a] The dimensions of the thread on the test cap shall be the minimum values, with a tolerance of ±0,05 mm, specified in standard sheet 7004-21 of IEC 60061-1.

Figure 14 – Test cap for lampholders E27

IECNORM.COM : Click to view the full PDF of IEC 60238:2016 RLV

Dimensions in millimetres (unless otherwise indicated)

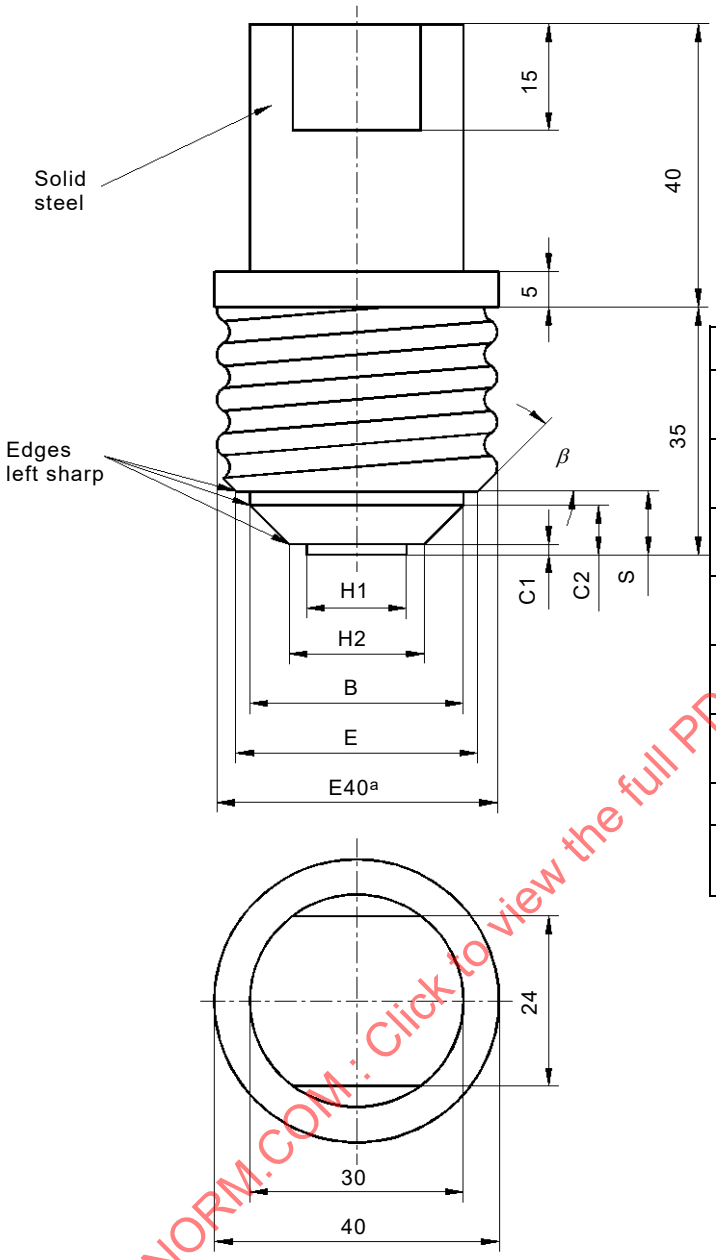

Reference	Dimension	Tolerance
C1	1,5	+0,0 −0,1
C2	7	+0,0 −0,1
S	9	+0,0 −0,06
H1	14	+0,04 −0,04
H2	19	+0,04 −0,04
B	30	+0,06 −0,0
E[a]	34	–
β	45°	+10′ −10′

IEC

[a] The dimensions of the thread on the test cap shall be the minimum values, with a tolerance of ±0,05 mm, specified in standard sheet 7004-24 of IEC 60061-1.

Figure 15 – Test cap for lampholders E40

IECNORM.COM : Click to view the full PDF of IEC 60238:2016 RLV

Linear dimensions in millimetres

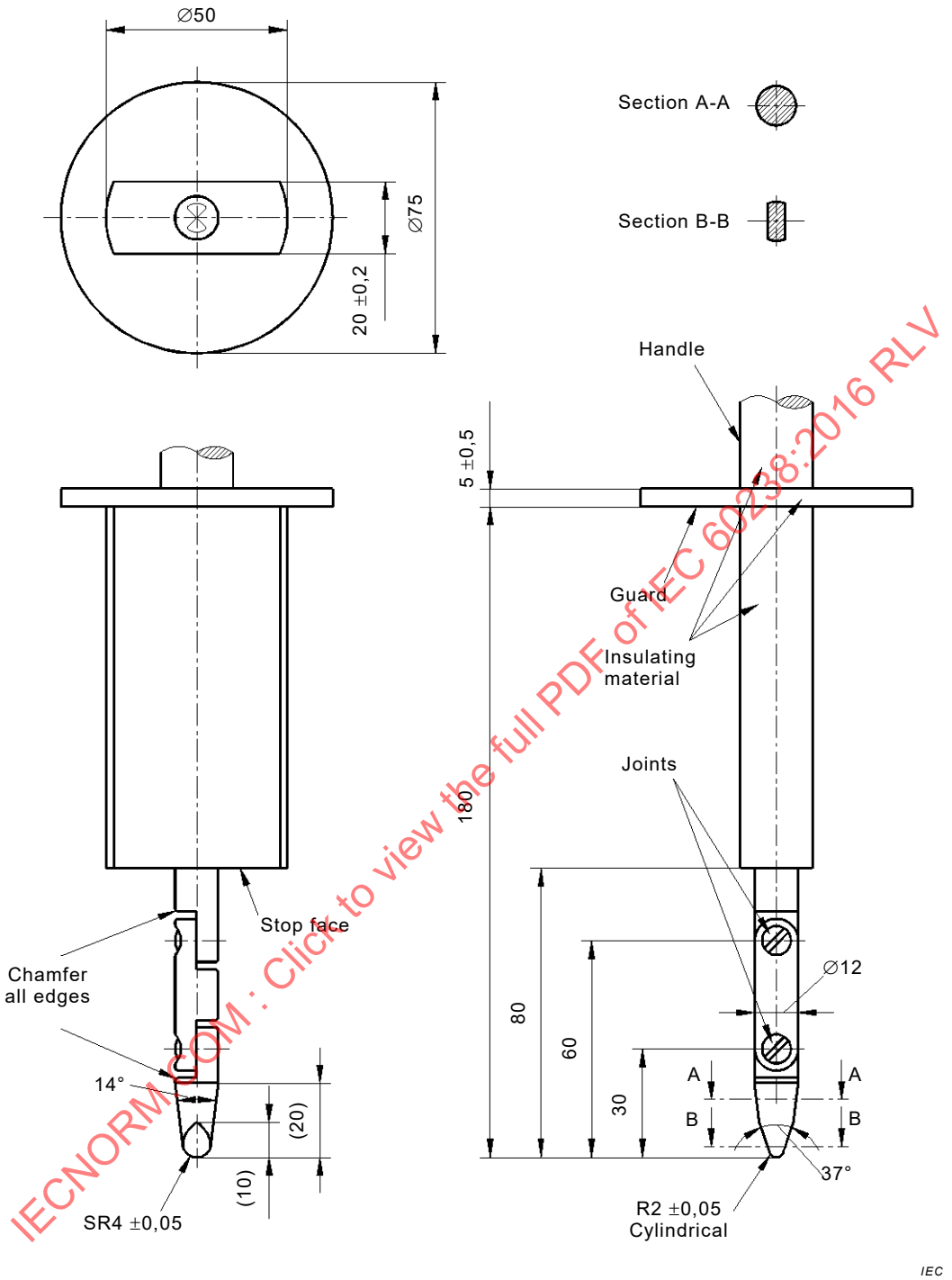

IECNORM.COM : Click to view the full PDF of IEC 60238:2016 RLV

Material: metal, except where otherwise specified.

Tolerances on dimensions without specific tolerance:

on angles: 0′/–10′
on linear dimensions:
- up to 25 mm: 0/–0,05 mm
- over 25 mm: ±0,2 mm

Both joints shall permit movement in the same plane and the same direction through an angle of 90° with a 0° to +10° tolerance.

Figure 16 – Standard test finger (according to IEC 60529)

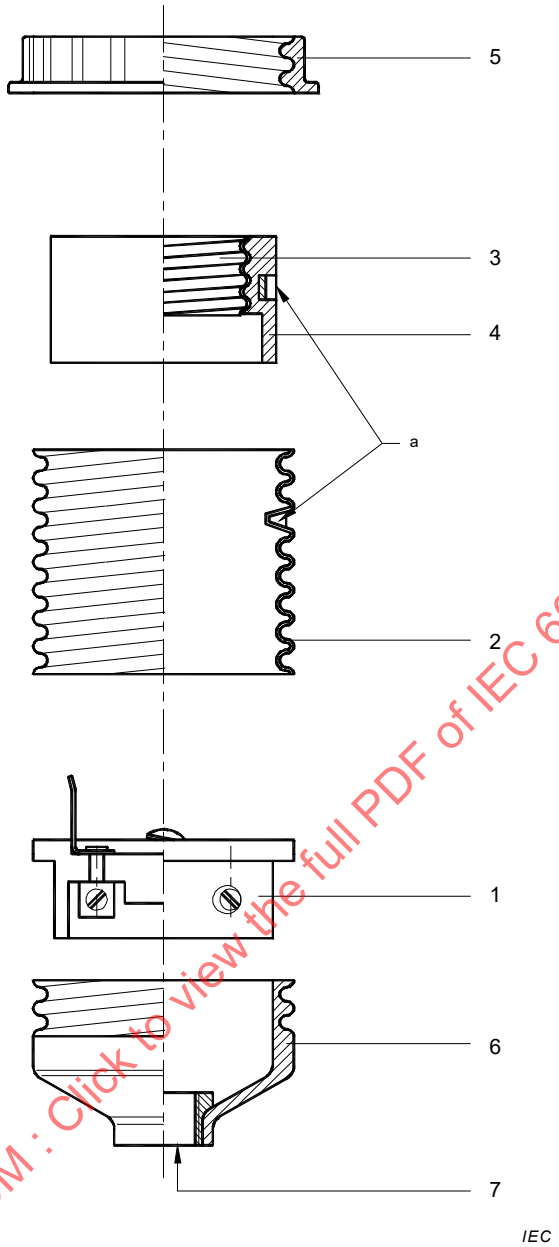

Key

1 terminal/contact assembly

2 outer shell

3 screw shell

4 insulating ring

5 shade ring

6 dome

7 threaded entry

The drawings are intended only to show typical parts of a lampholder and should not limit the design.

[a] In this example, parts 2, 3 and 4 are permanently connected together. In other constructions parts 1 and 3 may form one assembly.

Figure 17 – Clarification of some definitions

IECNORM.COM : Click to view the full PDF of IEC 60238:2016 RLV

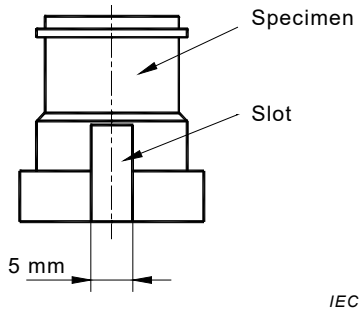

For E14 and E27 lampholders, a slot having a width of 5 mm is made to allow entry of the needle and for ventilation.

For E40 lampholders no slot is required.

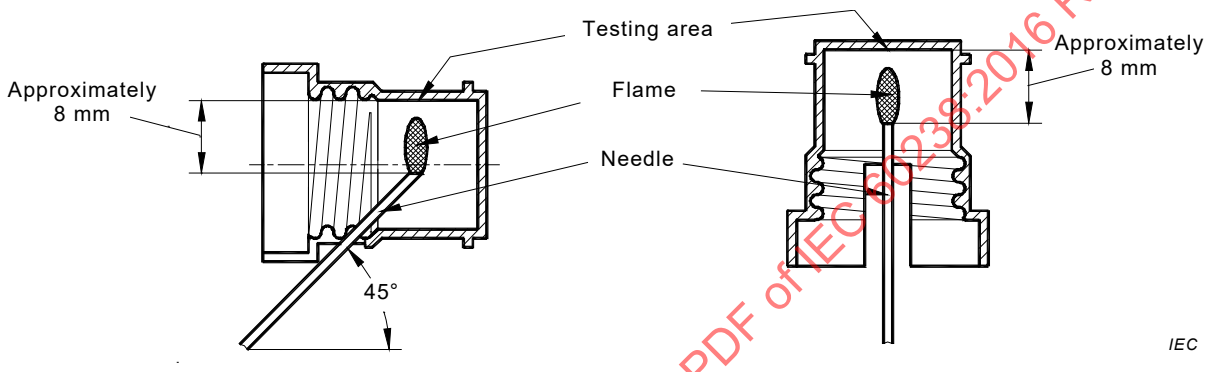

The left hand drawing shows how to perform the needle-flame test for testing the side-contact area (not applicable to lampholders E40).

The right-hand drawing shows how to perform the needle-flame test for testing the centre-contact area.

The minimum length of the needle is 35 mm.

Figure 18 – Preparation of specimens for the needle-flame test of 21.4

IECNORM.COM : Click to view the full PDF of IEC 60238:2016 RLV

Annex A
(normative)

Season cracking/corrosion test

~~NOTE~~ In the interest of environmental protection, the following requirements relating to test solution, volume and volume of vessel ~~may~~ can be modified at the discretion of the test laboratory.

In this event, the test vessel should retain a volume in the range 500 to 1 000 times larger than the volume of the sample and the volume of test solution should be such that the ratio of vessel volume to solution volume is in the range of 20:1 to 10:1. In case of doubt, however, the conditions of Clause A.1 apply.

A.1 Test cabinet

Closeable glass vessels shall be used for the test. These may, for example, be desiccator vessels or simple glass troughs with ground rim and lid. The vessel~~s~~ volume shall be at least 10 l.

A certain ratio of test space to volume of test solution shall be maintained (20:1 to 10:1).

A.2 Test solution

Preparation of 1 l of solution:

Dissolve 107 g ammonium chloride (reagent grade NH_4Cl) in about 0,75 l of distilled or fully demineralized water and add as much of 30 % sodium hydroxide solution (prepared from reagent grade NaOH and distilled or fully demineralized water) as is necessary to reach a pH value of 10 at 22 °C. For other temperatures, adjust this solution to the corresponding pH values specified in Table A.1.

Table A.1 – pH adjustment

Temperature °C	Test solution pH
22 ± 1	10,0 ± 0,1
25 ± 1	9,9 ± 0,1
27 ± 1	9,8 ± 0,1
30 ± 1	9,7 ± 0,1

After the pH adjustment, make up to 1 l with distilled or fully demineralized water. This does not change the pH value any further.

Keep the temperature constant in any event to within ±1 °C during the pH adjustment, and carry out the pH measurement using an instrument which permits an adjustment of the pH value to within ±0,02.

The test solutions may be used over a prolonged period, but the pH value, which represents a measure of the ammonia concentration in the vapour atmosphere, shall be checked at least every three weeks and adjusted if necessary.

IECNORM.COM : Click to view the full PDF of IEC 60238:2016 RLV

A.3 Test procedure

Introduce, preferably suspended, the specimens in the test cabinet in such a way that the ammonia vapour can take effect unhindered. The specimens shall not dip into the test solution nor touch each other. Supports or suspension devices shall be made of materials which are not susceptible to attack by ammonia vapour, e.g. glass or porcelain.

Testing shall be carried out at a constant temperature of (30 ± 1) °C to exclude visible condensed water formation caused by temperature fluctuations, which could severely falsify the test result.

Prior to testing, the test cabinet containing the test solution shall be brought to a temperature of (30 ± 1) °C. The test cabinet shall subsequently be filled as quickly as possible with the specimens pre-heated to 30 °C and closed.

This moment is to be considered the beginning of the test.

IECNORM.COM : Click to view the full PDF of IEC 60238:2016 RLV

Annex B
(informative)

Guidance for requirements in IEC 61058-1 applicable to switches in lampholders (see 14.2)

The clauses and subclauses mentioned in Annex B refer to IEC 61058-1:2000.

6 Rating

Subclauses 6.1 and 6.3 are applicable with the following limitations:

6.1 The maximum rated voltage is 250 V.

6.3 The maximum rated current is 2 A.

7.1 Classification of switches

7.1.1 According to nature of supply

Only 7.1.1.1 is applicable.

7.1.2 According to type of load to be controlled by each circuit of the switch

Only 7.1.2.4, 7.1.2.7 and 7.1.2.8 are applicable.

7.1.3 According to ambient temperature

Only 7.1.3.2 is applicable.

7.1.4 According to number of operating cycles

Only 7.1.4.4 is applicable.

For switched lampholders intended to be used in refrigerators or food freezers, 7.1.4.2 applies if the switch is actuated by the door of the refrigerator or food freezer.

7.1.9 According to ~~application level for resistance to heat and fire~~ the glow wire temperature

Only 7.1.9.1 is applicable.

8 Marking and documentation

Not applicable; 13.3 of this standard applies.

16 Heating

16.1 General requirements

Switches in lampholders intended to be used in refrigerators or food freezers are tested at the rated operating temperatures.

IECNORM.COM : Click to view the full PDF of IEC 60238:2016 RLV

20 Clearances, creepage distances, solid insulation and coatings of rigid printed board assemblies

20.2 Creepage distances

Material group IIIb is not useable.

For switched lampholders intended to be used in refrigerators or food freezers, Note 5 is applicable.

IECNORM.COM : Click to view the full PDF of IEC 60238:2016 RLV

Annex C
(informative)

Guidance for special requirements in appliance standards – Household and similar electrical appliances

~~NOTE~~ This standard is based on the requirements of the IEC 60598 series for luminaires. For application in other appliances (e.g. household appliances) the requirements of the relevant appliance standard should be observed.

C.1 List of relevant standards

The following list contains references to appliance standards in which experience has shown that lampholders covered by this standard may be built-in. This list shows a selection of the existing standards and does not lay claim to be exhaustive.

Publication	Title
IEC 60335-1	Household and similar electrical appliances – Safety – Part 1: General requirements
IEC 60335-2-6	Household and similar electrical appliances – Safety – Part 2-6: Particular requirements for stationary cooking ranges, hobs, ovens and similar appliances
IEC 60335-2-9	Household and similar electrical appliances – Safety – Part 2-9: Particular requirements for grills, toasters and similar portable cooking appliances
IEC 60335-2-11	Household and similar electrical appliances – Safety – Part 2-11: Particular requirements for tumble dryers
IEC 60335-2-24	Household and similar electrical appliances – Safety – Part 2-24: Particular requirements for refrigerating appliances, ice-cream appliances and ice-makers
IEC 60335-2-25	Household and similar electrical appliances – Safety – Part 2-25: Particular requirements for microwave ovens, including combination microwave ovens
IEC 60335-2-27	Household and similar electrical appliances – Safety – Part 2-27: Particular requirements for appliances for skin exposure to ultraviolet and infrared radiation
IEC 60335-2-31	Household and similar electrical appliances – Safety – Part 2-31: Particular requirements for range hoods and other cooking fume extractors
IEC 60335-2-36	Household and similar electrical appliances – Safety – Part 2-36: Particular requirements for commercial electric cooking ranges, ovens, hobs and hob elements
IEC 60335-2-42	Household and similar electrical appliances – Safety – Part 2-42: Particular requirements for commercial electric forced convection ovens, steam cookers and steam-convection ovens
IEC 60335-2-43	Household and similar electrical appliances – Safety – Part 2-43: Particular requirements for clothes dryers and towel rails
IEC 60335-2-49	Household and similar electrical appliances – Safety – Part 2-49: Particular requirements for commercial electric hot cupboards
IEC 60335-2-59	Household and similar electrical appliances – Safety – Part 2-59: Particular requirements for insect killers
IEC 60335-2-99	Household and similar electrical appliances – Safety – Part 2-99: Particular requirements for commercial electric hoods

IECNORM.COM : Click to view the full PDF of IEC 60238:2016 RLV

C.2 Reference to special requirements

C.2.1 IEC 60335-1:2001

Clause 8 – Protection against access to live parts

Clause 11 – Heating

Table 3 – Maximum normal temperature rises

Clause 24 – Components

Subclauses 24.1, 24.1.3 and 24.1.6 apply.

Clause 29 – Clearances, creepage distances and solid insulation

Requirements regarding resistance to tracking are given in 29.2.

Requirements regarding thickness of solid insulation are given in 29.3.

Clause 30 – Resistance to heat and fire

Annex E (normative) – Needle-flame test

Annex H (normative) – Switches

Annex N (normative) – Proof tracking test

Annex O (informative) – Selection and sequence of the tests of Clause 30

~~**IEC 60335-2-24: Particular requirements for refrigerating appliances, ice-cream appliances and ice-makers:**~~

C.2.2 IEC 60335-2-24:2002

Clause 7 – Marking and instructions

There is no special marking requirement for lampholders within Clause 7 of IEC 60335-2-24:2002. Nevertheless the following requirement is considered to be essential:

In case of lampholders intended for use in a refrigerated compartment of refrigerators and food freezers, the rated minimum temperature to which the lampholder can be subjected shall be marked on the lampholder. (e.g. –30 °C).

Clause 8 – Protection against access to live parts

Clause 24 – Components

Particular requirements for switches in doors are given in 24.1.3.

Clause 29 – Clearances, creepage distances and solid insulation

Requirements regarding resistance to tracking are given in 29.2:

For lampholders intended for use in a refrigerated compartment of refrigerators and food freezers, the specimen shall withstand 50 drops without failure at a test voltage of PTI 250.

IECNORM.COM : Click to view the full PDF of IEC 60238:2016 RLV

Annex D
(informative)

Schedule of amended subclauses containing more serious/critical requirements which require products to be retested

The schedule of clauses given in Annex D details the requirements of this ninth edition of IEC 60238 which require retesting to show compliance to this updated standard. Retesting may not be required in cases where examination of previous test results confirms conformity.

a) Subclause 10.2: Additional pull test requirements for E5 and E10 lampholders with a separate insert part mounted in an outer sleeve (candle shaped lampholders).

IECNORM.COM : Click to view the full PDF of IEC 60238:2016 RLV

Bibliography

IEC 60061 (all parts), *Lamp caps and holders together with gauges for the control of interchangeability and safety*

IEC 60061-4, *Lamp caps and holders together with gauges for the control of interchangeability and safety – Part 4: Guidelines and general information*

IEC 60068-2-20, *Environmental testing – Part 2-20: Tests – Test T: Test methods for solderability and resistance to soldering heat of devices with leads*

IEC 60335-1:2001, *Household and similar electrical appliances – Safety – Part 1: General requirements*

IEC 60335-2-24:2002, *Household and similar electrical appliances – Safety – Part 2-24: Particular requirements for refrigerating appliances, ice-cream appliances and ice-makers*

IEC 60598 (all parts), *Luminaires*

IEC 60664-1, *Insulation coordination for equipment within low-voltage systems – Part 1: Principles, requirements and tests*

IEC 60695-2-10, *Fire hazard testing – Part 2-10: Glowing/hot-wire based test methods – Glow-wire apparatus and common test procedure*

IECNORM.COM : Click to view the full PDF of IEC 60238:2016 RLV

IEC 60238

Edition 9.0 2016-07

INTERNATIONAL STANDARD

NORME INTERNATIONALE

IECNORM.COM : Click to view the full PDF of IEC 60238:2016 RLV

Edison screw lampholders

Douilles à vis edison pour lampes

IEC 60238:2016-07(en-fr)

CONTENTS

FOREWORD 4
1 Scope 6
2 Normative references 7
3 Terms and definitions 8
4 General requirement 11
5 General conditions for tests 11
6 Standard ratings 12
7 Classification 13
8 Marking 14
9 Dimensions 17
10 Protection against electric shock 19
11 Terminals 22
12 Provision for earthing 25
13 Construction 26
14 Switched lampholders 31
15 Moisture resistance, insulation resistance and electric strength 32
16 Mechanical strength 35
17 Screws, current-carrying parts and connections 39
18 Creepage distances and clearances 41
19 Normal operation 44
20 General resistance to heat 45
21 Resistance to heat, fire and tracking 47
22 Resistance to excessive residual stresses (season cracking) and to rusting 50
Annex A (normative) Season cracking/corrosion test 71
Annex B (informative) Guidance for requirements in IEC 61058-1 applicable to switches in lampholders (see 14.2) 73
Annex C (informative) Guidance for special requirements in appliance standards – Household and similar electrical appliances 75
Annex D (informative) Schedule of amended subclauses containing more serious/critical requirements which require products to be retested 77
Bibliography 78

Figure 1a –Nipple thread for lampholders: metric thread. Basic profile and design profile for the nut and for the screw 51
Figure 1b –Nipple thread for lampholders: ISO standard pipe thread. Basic profile and design profile for the nut and for the screw 52
Figure 2a – Gauges for metric thread for nipples 53
Figure 2b – Gauges for ISO standard pipe thread for nipples 54
Figure 3 – Gauge for holes for backplate lampholder screws 55
Figure 4 – Normal operation test apparatus 56
Figure 5 – Test caps for the test of Clause 18 57
Figure 6 – Torque apparatus 58
Figure 7 – Tumbling barrel 59

IECNORM.COM : Click to view the full PDF of IEC 60238:2016 RLV

Figure 8 – Impact-test apparatus 60
Figure 9 – Pressure apparatus 61
Figure 10 – Ball-pressure test apparatus 61
Figure 11 – Test cap for the tests of 15.4 and 20.3 62
Figure 12 – Bending apparatus 63
Figure 13 – Test cap A and test cap B for lampholders E14 65
Figure 14 – Test cap for lampholders E27 66
Figure 15 – Test cap for lampholders E40 67
Figure 16 – Standard test finger (according to IEC 60529) 68
Figure 17 – Clarification of some definitions 69
Figure 18 – Preparation of specimens for the needle-flame test of 21.4 70

Table 1 – Thickness of screw shells and contacts 18
Table 2 – Minimum effective screw lengths 18
Table 3 – Dimensions of threaded entries and set screws 19
Table 4 – Minimum dimensions of pillar-type terminals 23
Table 5 – Minimum dimensions of screw-type terminals 24
Table 6 – Pull and torque values 29
Table 7 – Insertion torque 31
Table 8 – Minimum and maximum removal torques 31
Table 9 – Test cap dimensions 35
Table 10 – Heights of fall 37
Table 11 – Maximum deformation values 38
Table 12 – Torque values 40
Table 13a – Minimum distances for AC (50/60 Hz) sinusoidal voltages: Impulse withstand category II 42
Table 13b – Minimum distances for AC (50/60 Hz) sinusoidal voltages: Impulse withstand category III 43
Table 14 – Minimum distances for non-sinusoidal pulse voltages 43
Table 15 – Heating cabinet temperatures 46
Table A.1 – pH adjustment 71

IECNORM.COM : Click to view the full PDF of IEC 60238:2016 RLV

INTERNATIONAL ELECTROTECHNICAL COMMISSION

EDISON SCREW LAMPHOLDERS

FOREWORD

1) The International Electrotechnical Commission (IEC) is a worldwide organization for standardization comprising all national electrotechnical committees (IEC National Committees). The object of IEC is to promote international co-operation on all questions concerning standardization in the electrical and electronic fields. To this end and in addition to other activities, IEC publishes International Standards, Technical Specifications, Technical Reports, Publicly Available Specifications (PAS) and Guides (hereafter referred to as "IEC Publication(s)"). Their preparation is entrusted to technical committees; any IEC National Committee interested in the subject dealt with may participate in this preparatory work. International, governmental and non-governmental organizations liaising with the IEC also participate in this preparation. IEC collaborates closely with the International Organization for Standardization (ISO) in accordance with conditions determined by agreement between the two organizations.

2) The formal decisions or agreements of IEC on technical matters express, as nearly as possible, an international consensus of opinion on the relevant subjects since each technical committee has representation from all interested IEC National Committees.

3) IEC Publications have the form of recommendations for international use and are accepted by IEC National Committees in that sense. While all reasonable efforts are made to ensure that the technical content of IEC Publications is accurate, IEC cannot be held responsible for the way in which they are used or for any misinterpretation by any end user.

4) In order to promote international uniformity, IEC National Committees undertake to apply IEC Publications transparently to the maximum extent possible in their national and regional publications. Any divergence between any IEC Publication and the corresponding national or regional publication shall be clearly indicated in the latter.

5) IEC itself does not provide any attestation of conformity. Independent certification bodies provide conformity assessment services and, in some areas, access to IEC marks of conformity. IEC is not responsible for any services carried out by independent certification bodies.

6) All users should ensure that they have the latest edition of this publication.

7) No liability shall attach to IEC or its directors, employees, servants or agents including individual experts and members of its technical committees and IEC National Committees for any personal injury, property damage or other damage of any nature whatsoever, whether direct or indirect, or for costs (including legal fees) and expenses arising out of the publication, use of, or reliance upon, this IEC Publication or any other IEC Publications.

8) Attention is drawn to the Normative references cited in this publication. Use of the referenced publications is indispensable for the correct application of this publication.

9) Attention is drawn to the possibility that some of the elements of this IEC Publication may be the subject of patent rights. IEC shall not be held responsible for identifying any or all such patent rights.

International Standard IEC 60238 has been prepared by subcommittee 34B: Lamp caps and holders, of IEC technical committee 34: Lamps and related equipment.

This ninth edition cancels and replaces the eighth edition published in 2004, Amendment 1: 2008 and Amendment 2:2011. This edition constitutes a technical revision.

This edition includes the following significant technical changes with respect to the previous edition:

a) Addition of a pull test for certain E5 and E10 lampholders.

b) Annex D listing amended requirements/clauses which require products to be retested.

IECNORM.COM : Click to view the full PDF of IEC 60238:2016 RLV

The text of this standard is based on the following documents:

FDIS	Report on voting
34B/1852/FDIS	34B/1860/RVD

Full information on the voting for the approval of this standard can be found in the report on voting indicated in the above table.

This publication has been drafted in accordance with the ISO/IEC Directives, Part 2.

In this standard, the following print types are used:

– *compliance statements: in italic type.*

The committee has decided that the contents of this publication will remain unchanged until the stability date indicated on the IEC web site under "http://webstore.iec.ch" in the data related to the specific publication. At this date, the publication will be

- reconfirmed,
- withdrawn,
- replaced by a revised edition, or
- amended.

IECNORM.COM : Click to view the full PDF of IEC 60238:2016 RLV

EDISON SCREW LAMPHOLDERS

1 Scope

This International Standard applies to lampholders with Edison thread E14, E27 and E40, designed for connection to the supply of lamps and semi-luminaires[1] only.

It also applies to switched-lampholders for use in AC circuits only, where the working voltage does not exceed 250 V r.m.s.

This standard also applies to lampholders with Edison thread E5 designed for connection to the supply mains of series connected lamps, with a working voltage not exceeding 25 V, to be used indoors, and to lampholders with Edison thread E10 designed for connection to the supply mains of series connected lamps, with a working voltage not exceeding 60 V, to be used indoors or outdoors. It also applies to lampholders E10 for building-in, for the connection of single lamps to the supply. These lampholders are not intended for retail sale.

As far as it reasonably applies, this standard also covers lampholders other than lampholders with Edison thread designed for connection of series-connected lamps to the supply.

NOTE This type of lampholder is for example used in Christmas tree lighting chains.

As far as it reasonably applies, this standard also covers adapters.

This standard also covers lampholders which are, wholly or partly, integral with a luminaire or intended to be built into appliances. It covers the requirements for the lampholder only. For all other requirements, such as protection against electric shock in the area of the terminals or of the lamp cap, the requirements of the relevant appliance standard are observed and tested after building into the appropriate equipment, when that equipment is tested according to its own standard. Such lampholders as well as lampholders provided with a snap-on outer shell, for use by luminaire manufacturers only, are not for retail sale.

This standard applies to lampholders to be used indoors or outdoors in residential as well as in industrial lighting installations. It also applies to candle lampholders. In locations where special conditions prevail, as for street lighting, on board ships, in vehicles and in hazardous locations, for example where explosions are liable to occur, special constructions may be required.

This standard does not apply to three-light lampholders E26d.

This standard is based on the following data relative to lamps for general lighting service:

– caps E14 are used for lamps with a current not exceeding 2 A;
– caps E27 are used for lamps with a current not exceeding 4 A;
– caps E40 are used for lamps with a current not exceeding 16 A, or 32 A if the nominal voltage of the supply does not exceed 130 V (see 5.5 and 6.3).

Where lampholders are used in luminaires, their maximum operating temperatures are specified in IEC 60598.

IECNORM.COM : Click to view the full PDF of IEC 60238:2016 RLV

[1] Requirements for lampholders suitable for semi-luminaires are under consideration.

2 Normative references

The following documents, in whole or in part, are normatively referenced in this document and are indispensable for its application. For dated references, only the edition cited applies. For undated references, the latest edition of the referenced document (including any amendments) applies.

IEC 60061-1, *Lamp caps and holders together with gauges for the control of interchangeability and safety – Part 1: Lamp caps*

IEC 60061-2, *Lamp caps and holders together with gauges for the control of interchangeability and safety – Part 2: Lampholders*

IEC 60061-3, *Lamp caps and holders together with gauges for the control of interchangeability and safety – Part 3: Gauges*

IEC 60068-2-32:1975, *Basic environmental testing procedures – Part 2-32: Tests – Test Ed: Free fall*

IEC 60068-2-75:2014, *Environmental testing – Part 2-75: Tests – Test Eh: Hammer tests*

IEC 60112:2003, *Method for the determination of the proof and the comparative tracking indices of solid insulating materials*
Amendment 1:2009

IEC 60227 (all parts), *Polyvinyl chloride insulated cables of rated voltages up to and including 450/750 V*

IEC 60245 (all parts), *Rubber insulated cables – Rated voltages up to and including 450/750 V*

IEC 60352-1:1997, *Solderless connections – Part 1: Wrapped connections – General requirements, test methods and practical guidance*

IEC 60399, *Barrel thread for lampholders with shade holder ring*

IEC 60417, *Graphical symbols for use on equipment* (available at: http://www.graphical-symbols.info/equipment)

IEC 60529:1989, *Degrees of protection provided by enclosures (IP Code)*
Amendment 1:1999
Amendment 2:2013 [2]

IEC 60598-1, *Luminaires – Part 1: General requirements and tests*

IEC 60630, *Maximum lamp outlines for incandescent lamps*

IEC 60695-2-11:2014, *Fire hazard testing – Part 2-11: Glowing/hot-wire based test methods – Glow-wire flammability test method for end-products (GWEPT)*

IEC 60695-11-5, *Fire hazard testing – Part 11-5: Test flames – Needle-flame test method – Apparatus, confirmatory test arrangement and guidance*

IECNORM.COM : Click to view the full PDF of IEC 60238:2016 RLV

---

[2] A consolidated edition 2.2 (2013) exists including edition 2.0 (1989) and its Amendment 1 (1999) and Amendment 2 (2013).

IEC 61058-1:2000, *Switches for appliances – Part 1: General requirements*

ISO 4046-4:2002, *Paper, board, pulps and related terms – Vocabulary – Part 4: Paper and board grades and converted products*

3 Terms and definitions

For the purposes of this document, the following terms and definitions apply.

3.1
cord-grip lampholder
lampholder incorporating a method of retaining a flexible cord by which it may then be suspended

3.2
threaded entry lampholder
lampholder incorporating a threaded component at the point of entry of the supply wires permitting the lampholder to be mounted on a mating threaded support

Note 1 to entry: A threaded entry lampholder was formerly called a “nipple lampholder”.

3.3
backplate lampholder
lampholder so designed as to be suitable for mounting by means of an associated or integral backplate, directly onto a supporting surface or appropriate box

3.4
lampholder for building-in
lampholder designed to be built into a luminaire, an additional enclosure or the like

3.4.1
unenclosed lampholder
lampholder for building-in so designed that it requires additional means, for example an enclosure, to meet the requirements of this standard with regard to protection against electric shock

3.4.2
enclosed lampholder
lampholder for building-in so designed that on its own it fulfils the requirements of this standard with regard to protection against electric shock and IP classification, if appropriate

3.5
independent lampholder
lampholder so designed that it can be mounted separately from a luminaire and at the same time providing all the necessary protection according to its classification and marking

3.6
terminal/contact assembly
part or assembly of parts which provides a means of connection between the termination of a supply conductor and the contact making surfaces of the corresponding lamp cap

Note 1 to entry: For clarification of some definitions, see also Figure 17.

3.7
outer shell
cylindrical component protecting the user from contact with the lamp cap.

Note 1 to entry: It may or may not be provided with an external screw thread for fixing a shade ring.

IECNORM.COM : Click to view the full PDF of IEC 60238:2016 RLV

Note 2 to entry: For clarification of some definitions, see also Figure 17.

3.7.1
snap-on outer shell
outer shell for screwless assembly which does not contain the screw shell

Note 1 to entry: The lampholder should not be used when the snap-on outer shell is removed. It is therefore recommended to place an approval mark, if provided, in such a way that it is not visible when this type of outer shell is removed.

3.8
screw shell
cylindrical component having an internal screw thread of Edison form for the retention of the corresponding lamp (cap)

Note 1 to entry: In some constructions, the screw shell is permanently fixed to or integral with the outer shell.

Note 2 to entry: For clarification of some definitions, see also Figure 17.

3.9
insulating ring
cylindrical intermediate piece of insulating material separating a metal screw shell and a metal outer shell

Note 1 to entry: For clarification of some definitions, see also Figure 17.

3.10
shade ring
cylindrical component having an internal thread or other means to engage a corresponding support on the outer shell and intended to carry or retain a shade

Note 1 to entry: For clarification of some definitions, see also Figure 17.

3.11
dome
part of a cord-grip lampholder or threaded entry lampholder which shields the connecting terminals

Note 1 to entry: For clarification of some definitions, see also Figure 17.

3.12
basic insulation
insulation applied to live parts to provide basic protection against electric shock

Note 1 to entry: Basic insulation does not necessarily include insulation used exclusively for functional purposes.

3.13
supplementary insulation
independent insulation applied in addition to basic insulation in order to provide protection against electric shock in the event of a failure of basic insulation

3.14
double insulation
insulation comprising both basic insulation and supplementary insulation

3.15
reinforced insulation
single insulation system applied to live parts, which provides a degree of protection against electric shock equivalent to double insulation under the conditions specified

Note 1 to entry: The term "insulation system" does not imply that the insulation is one homogeneous piece. It may comprise several layers which cannot be tested singly as supplementary or basic insulation.

IECNORM.COM : Click to view the full PDF of IEC 60238:2016 RLV

3.16
live part
conductive part which may cause an electric shock

3.17
type test
test or series of tests made on a type test sample, for the purpose of checking compliance of the design of a given product with the requirements of the relevant standard

3.18
type test sample
sample consisting of one or more similar specimens submitted by the manufacturer or responsible vendor for the purpose of a type test

3.19
semi-luminaire
unit similar to a self-ballasted lamp but designed to utilize a replaceable light source and/or starting device

3.20
rated operating temperature
highest temperature for which the holder is designed

3.21
rated minimum temperature
lowest temperature for which the holder is designed (applicable only to lampholders intended for use in refrigerators and food freezers)

3.22
angled lampholder
lampholder, the rear side of which (threaded entry and/or dome) is at an angled position to the screw shell axis

3.23
lampholder with retention device
lampholder with a device intended to prevent the lamp from becoming loose in the holder

Note 1 to entry: Lamps can, for example, become loose due to changes in temperature or to vibrations.

3.24
impulse withstand category
numeral defining a transient overvoltage condition

Note 1 to entry: Impulse withstand categories I, II, III and IV are used.

a) Purpose of classification of impulse withstand categories

Impulse withstand categories are to distinguish different degrees of availability of equipment with regard to required expectations on continuity of service and on an acceptable risk of failure.

By selection of impulse withstand levels of equipment insulation, co-ordination can be achieved in the whole installation, reducing the risk of failure to an acceptable level providing a basis for overvoltage control.

A higher characteristic numeral of an impulse withstand category indicates a higher specific impulse withstand of the equipment and offers a wider choice of methods for overvoltage control.

The concept of impulse withstand category is used for equipment energized directly from the mains.

b) Description of impulse withstand categories

Equipment of impulse withstand category I is equipment which is intended to be connected to the fixed electrical installations of buildings. Protective means are taken outside the equipment – either in the fixed installation or between the fixed installation and the equipment – to limit transient overvoltages to the specific level.

Equipment of impulse withstand category II is equipment to be connected to the fixed electrical installations of buildings.

IECNORM.COM : Click to view the full PDF of IEC 60238:2016 RLV

Equipment of impulse withstand category III is equipment which is part of the fixed electrical installations and other equipment where a higher degree of availability is expected.

Equipment of impulse withstand category IV is for use at or in the proximity of the origin of the electrical installations of buildings upstream of the main distribution board.

3.25
primary circuit
circuit which is directly connected to the AC mains supply

Note 1 to entry: It includes, for example, the means for connection to the AC mains supply, the primary windings of transformers, motors and other loading devices.

3.26
secondary circuit
circuit which has no direct connection to a primary circuit and derives its power from a transformer, converter or equivalent isolation device, or from a battery

Note 1 to entry: Exception: autotransformers. Although having direct connection to a primary circuit, the tapped part of them is also deemed to be a secondary circuit in the sense of this definition.

Note 2 to entry: Mains transients in such a circuit are attenuated by the corresponding primary windings. Also inductive ballasts reduce the mains transient voltage height. Therefore, components located after a primary circuit or after an inductive ballast can be suited for an impulse withstand category of one step lower, i.e. for impulse withstand category II.

3.27
adapter
component used for the electrical and mechanical connection of a lamp to a lampholder

Note 1 to entry: This definition is specific for this standard. The definition of an adapter in principle could vary very much depending on its use. In most cases such a component is used to bridge differences in the screw thread diameter between the lampholder and the lamp.

3.28
enclosed reinforced insulated lampholder
lampholder for building-in so designed that on its own it fulfils the requirements for double or reinforced insulated parts in class II applications

3.29
partly reinforced insulated lampholder
lampholder for building-in so designed that some parts of the lampholder require additional means to fulfil the requirements with regard to double or reinforced insulation

Note 1 to entry: In some cases, the dimensions might be achieved only after mounting into the luminaire.

4 General requirement

Lampholders shall be so designed and constructed that in normal use they function reliably and cause no danger to persons or surroundings.

In general, compliance is checked by carrying out all the tests specified.

In addition, the enclosure of independent lampholders shall comply with the requirements of IEC 60598-1, including the classification and marking requirements of that standard.

5 General conditions for tests

5.1 Tests according to this standard are type tests.

NOTE The requirements and tolerances permitted by this standard are related to testing of a type test sample submitted for that purpose.

IECNORM.COM : Click to view the full PDF of IEC 60238:2016 RLV

Compliance of the type test sample does not ensure compliance of the whole production of a manufacturer with this safety standard.

In addition to type testing, conformity of production is the responsibility of the manufacturer and can include routine tests and quality assurance.

For further information on conformity testing during manufacture see IEC 60061-4.

5.2 Unless otherwise specified, the tests are made at an ambient temperature of 20 °C ± 5 °C and with the holder tested as delivered and installed as in normal use.

5.3 The tests and inspections are carried out on a total of

– nine specimens for non-switched lampholders, or
– 12 specimens for switched lampholders

in the following order of clauses:

– three specimens: Clauses 2 to 13 (except for 10.1 and 11.2) and Clauses 15 to 18;
– three specimens: Clause 14 (switched-lampholder tests only);
– three specimens: 10.1 and Clauses 19 and 20;
– two specimens: Clause 21 (of which one specimen for the test of 21.1 and the other for the tests of 21.3 or 21.4);
– one specimen: 21.5 and Clause 22.

For testing lampholders with a retention device, the retention device shall be removed.

For testing lampholders with a retention device according to 13.14, three additional specimens are required with the retention device kept in place.

For testing of screwless terminals according to 11.2, separate specimens are required in addition.

5.4 *In case of doubt, gauges, test caps and mandrels are introduced into the specimens, unless otherwise specified, by applying the following torques:*

– *0,2 Nm for lampholders E5;*
– *0,2 Nm for lampholders E10;*
– *0,2 Nm for lampholders E14;*
– *0,4 Nm for lampholders E27;*
– *0,8 Nm for lampholders E40.*

5.5 *For lampholders E40 with a rated current of 32 A, the tests shall be based on this rated current.*

5.6 *Lampholders are deemed to comply with this standard if no specimen fails in the complete series of tests specified in 5.3.*

If one specimen fails in one test, that test and the preceding ones which may have influenced the result of that test are repeated on another set of specimens to the number required by 5.3, all of which shall then comply with the repeated tests and with the subsequent tests. Lampholders are deemed not to comply with this standard if there are more failures than one.

6 Standard ratings

6.1 Standard rated voltages are 250 V and 500 V.

IECNORM.COM : Click to view the full PDF of IEC 60238:2016 RLV

For lampholders E14, and for switched lampholders E27, a rated voltage of 250 V only is allowed.

For lampholders E5 and E10 intended for the connection of series-connected lamps to the supply, the rated voltage shall not exceed 25 V for lampholders E5 and not exceed 60 V for lampholders E10.

NOTE 1 These values refer to the voltage between parts of different polarity.

For lampholders E10 intended for the connection of single lamps to the supply, a rated voltage of 250 V only is allowed.

NOTE 2 These lampholders are also used for such special cases as series-connected lamps, where, because of the low number of lamps, 60 V per lampholder is exceeded.

With the exception given for lampholders E5 and E10, the rated voltage shall be not less than 250 V. Additionally a rated voltage of 125 V is allowed for lampholders E40.

Compliance is checked by inspection of the marking.

6.2 Standard rated currents are

– 0,2 A for lampholders E5;
– 0,5 A for lampholders E10;
– 2 A for lampholders E14;
– 2 A for switched-lampholders E27;
– 4 A for other lampholders E27;
– 16 A for lampholders E40.

The rated current shall be not less than the standard value.

Compliance is checked by inspection of the marking.

6.3 Lampholders E40 to be used on 125 V installations may have an additional nominal rating of 32 A.

NOTE This nominal rating covers the voltages up to and including 130 V.

Compliance is checked by inspection of the marking.

6.4 The rated operating temperature for lampholders intended for use in high temperature conditions (T marked holders) shall be not lower than 140 °C for lampholders E14, not lower than 170 °C for lampholders E27 and not lower than 230 °C for lampholders E40.

Compliance is checked by inspection of the marking.

NOTE The rated operating temperatures for Edison screw lampholders without T marking are given in IEC 60598-1, Table 12.1. They are

– 135 °C for lampholders E14;

– 165 °C for lampholders E27;

– 225 °C for lampholders E40.

7 Classification

Lampholders are classified as defined in 7.1 to 7.6.

IECNORM.COM : Click to view the full PDF of IEC 60238:2016 RLV

7.1 According to the material of the external parts:

– lampholders of insulating material;
– metal lampholders.

NOTE Lampholders with external parts consisting partly of metal and lampholders comprising external parts of insulating material with a conductive outer surface, for example a metallized outer shell, are considered as metal lampholders (see 13.3). This does not apply to threaded entries and external parts, for example a metal shade ring mounted onto the outside of a lampholder of insulating material, which cannot become live even in the case of an insulation fault. Metal holders with insulating coverings are considered as metal lampholders (see 10.5).

In order to check whether or not a surface is conductive, two stripe-electrodes 1,5 mm wide, 25 mm long and with a distance of 2 mm from each other are applied to the surface (e.g. with silver conductive paint). In accordance with 15.4, the insulating resistance is measured between the stripes. The surface is considered to be conductive if the resistance is less than 5 MΩ.

7.2 According to degree of protection against ingress of water:

– ordinary lampholders;
– drip-proof lampholders.

7.3 According to method of fixing:

– threaded entry lampholders;
– cord-grip lampholders;
– backplate lampholders;
– other lampholders.

NOTE Examples of other lampholders are lampholders provided with a mechanical suspension device, e.g. a hook.

7.4 According to type:

– switched-lampholders, provided with an integral switch to control the supply to the lamp;
– non-switched lampholders.

7.5 According to protection against electric shock:

– unenclosed lampholders;
– enclosed lampholders;
– independent lampholders;
– partly reinforced insulated lampholders;
– enclosed reinforced insulated lampholders.

NOTE Where a lampholder is used with a working voltage of 50 % or less of its maximum rating, it can be regarded as equivalent to a reinforced insulated lampholder.

7.6 According to resistance to heat:

– lampholders for rated operating temperatures up to the limits given in 6.4;
– lampholders for operating in high temperature conditions (T marked holders).

8 Marking

8.1 Lampholders, other than lampholders E5 and E10, shall be marked with the following:

– rated current, in amperes;
– rated voltage, in volts, and rated pulse voltage, in kV, if higher than

IECNORM.COM : Click to view the full PDF of IEC 60238:2016 RLV

- 2,5 kV for lampholders rated 250 V,
- 4 kV for lampholders rated 500 V;

The rated pulse voltage of the lampholder (in kV) should either be marked on the lampholder or made available in the manufacturer's catalogue or the like.

NOTE 1 Some lampholders still show rated voltages higher than 500 V. This is an earlier way of expressing the permissible pulse voltage via a rated voltage. For such lampholders, the creepage distances and clearances can be found in IEC 60598-1.

– symbol for nature of current, if required (for switched lampholders only);

– mark of origin (this may take the form of a trade mark, manufacturer's identification mark or the name of the responsible vendor);

– type reference;

Available technical documentation of the manufacturer like printed catalogues or online catalogues should allow a clear identification of a lampholder either by a unique catalogue number or by an identifying reference on the holder, specifying the essential characteristic features and the basic design of the product supplemented by a clear description. Variations of the basic design like for example different cable length, fixing means, colours etc., which do not affect safety or performance of the lampholder, can be disregarded in the type reference marked on the product. Variations included in the type testing procedure are listed in the corresponding test reports.

– the degree of protection against ingress of water for drip-proof lampholders (see 8.2);

– rated operating temperature "T", indicating the highest operating temperature, if applicable.

The marking of the rated operating temperature is not required for lampholders whose exterior is made wholly of ceramic material. For these lampholders, this information, if applicable, shall either be marked on the lampholder or be made available in the manufacturer's catalogue.

For lampholders according to this standard, the distances for impulse withstand category II are usually applicable. For holders in equipment where a higher degree of availability is expected, distances for impulse withstand category III may be applicable. This information shall be indicated in the manufacturer's catalogue or the like.

Enclosed reinforced insulated lampholders offer an adequate level of protection for use in luminaires where they are accessible in normal use. This information shall be indicated in the manufacturer's catalogue or the like.

For partly reinforced insulated lampholders, sufficient creepage distances and clearances to outer accessible surfaces will require additional protection to some parts of the lampholder by the luminaire design or by use of additional attachment(s) or cover(s). This information shall be indicated in the manufacturer's catalogue or the like.

Lampholders E10 shall be marked with the following:

– rated voltage, in volts;

– mark of origin;

– type reference;

Available technical documentation of the manufacturer like printed catalogues or online catalogues should allow a clear identification of a lampholder either by a unique catalogue number or by an identifying reference on the holder, specifying the essential characteristic features and the basic design of the product supplemented by a clear description. Variations of the basic design like for example different cable length, fixing means, colours etc., which do not affect safety or performance of the lampholder, can be disregarded in the type reference marked on the product. Variations included in the type testing procedure are listed in the corresponding test reports.

– the degree of protection against ingress of water, if applicable.

IECNORM.COM : Click to view the full PDF of IEC 60238:2016 RLV

Lampholders E5 shall be marked with the following:

– mark of origin;

– type reference.

Available technical documentation of the manufacturer like printed catalogues or online catalogues should allow a clear identification of a lampholder either by a unique catalogue number or by an identifying reference on the holder, specifying the essential characteristic features and the basic design of the product supplemented by a clear description. Variations of the basic design like for example different cable length, fixing means, colours etc., which do not affect safety or performance of the lampholder, can be disregarded in the type reference marked on the product. Variations included in the type testing procedure are listed in the corresponding test reports.

Compliance is checked by inspection.

NOTE 2 The type reference for lampholders E10 and E5 can be a catalogue number.

8.2 If symbols are used for current and voltage, A shall denote amperes and V volts.

Alternatively, for volt and ampere ratings, figures may be used alone, the figure for the rated current being marked before or above that for the rated voltage and separated from the latter by an oblique stroke or line.

Therefore the marking of current and voltage may be as follows:

2 A 250 V or 2/250 or $\frac{2}{250}$.

The symbol for direct current shall be $\overline{}$ (IEC 60417-5031:2002-10).

The symbol for protection against ingress of water for drip-proof lampholders shall be IPX1.

NOTE Where X is used in the IP number it indicates a missing numeral in the example, but both the appropriate numerals in accordance with IEC 60529 are marked.

The letter T shall be followed by the value of the rated operating temperature in degrees Celsius.

Compliance is checked by inspection.

8.3 The marking of the degree of protection against ingress of water shall be on the outside of the holder.

Compliance is checked by inspection.

8.4 An earthing terminal shall be indicated by the symbol ⏚ (IEC 60417-5019:2002-10).

This symbol shall not be placed on screws, removable washers or other easily removable parts.

Compliance is checked by inspection.

8.5 Marking shall be durable and easily legible.

IECNORM.COM : Click to view the full PDF of IEC 60238:2016 RLV

Compliance is checked by inspection and, after the tests of Clause 19 have been completed, by trying to remove the marking by rubbing lightly for 15 s with a piece of cloth soaked with water and for a further 15 s with a piece of cloth soaked with petroleum spirit.

After the tests the marking shall be still legible.

NOTE The petroleum spirit used typically consists of a solvent hexane with a content of aromatics of maximum 0,1 volume percentage, a kauri-butanol value of 29, an initial boiling-point of approximately 65 °C, a dry-point of approximately 69 °C and a specific density of approximately 0,68 g/cm^3.

9 Dimensions

9.1 Lampholders E10, E14, E27 and E40 shall comply with the current edition of the standard sheets of the IEC 60061 series.

Compliance shall be checked by measuring in conformity with IEC 60061-2, Standard Sheet 7005-20.

The minimum dimensions of the screw thread and dimension X shall be checked by means of gauges according to Standard Sheets 7006-25 (E10, E14 and E40) and 7006-25A (E27), and by means of the gauge according to Standard Sheet 7006-26 of IEC 60061-3.

Lampholders designed with a barrel thread for shade holder rings and shade holder rings shall comply with IEC 60399.

Compliance is checked by means of the gauges given in IEC 60399.

9.2 Lampholders shall allow insertion of all corresponding lamps so as to make contact.

Compliance is checked by means of gauges according to the current edition of the following standard sheets of IEC 60061-3 and according to the indications of these sheets:

- *lampholders E14: 7006-30 and 7006-31;*
- *candle lampholders E14: 7006-30A and 7006-31;*
- *lampholders E27: 7006-21 and 7006-22A;*
- *lampholders E40: 7006-23 and 7006-24.*

Pending gauges for lampholders E5 and E10, the contact-making is checked by means of the corresponding lamps. It is presumed that the manufacturer of the lampholder for the purpose of the test delivers the lamps for which the lampholder is intended.

The checking of contact-making is done on lampholders as delivered and after the tests of Clauses 19 and 20.2.

For lampholders for use in appliances other than luminaires only:

If the fixing means of lampholders are integrated parts of the rim and the lampholder is designed for use with a selected standardized lamp only, parts of the lampholder rim could interfere with the relevant contact-making gauge. In this case, compliance with the requirements for maximum lamp outlines according to IEC 60630 for the lamp indicated in the lampholder manufacturer's instructions shall be checked. Following this checking, the contact-making gauge shall be applied after those parts of the lampholder interfering with the gauge have been removed.

For testing such lampholders, two additional specimens specially prepared to accept the relevant contact-making gauge are required.

IECNORM.COM : Click to view the full PDF of IEC 60238:2016 RLV

9.3 The following dimensions shall be not less than the values shown in Table 1.

Table 1 – Thickness of screw shells and contacts

Dimension	Lampholder				
	E5	E10	E14	E27	E40
Thickness of the screw shell, if any (mm):					
– when the shell is unsupported	0,20	0,20	0,30	0,30	0,50
– when the shell is supported by insulating material over a total distance of at least three-quarters of the circumference of the shell	0,15	0,15	0,25	0,25	0,40
Thickness of side or central contacts, if resilient (mm)	0,18	0,18	0,28	0,38	0,48[a]
[a] For the use of side-contacts in lampholders E40, see 13.11.					

Compliance is checked by measurement.

NOTE 1 Thicknesses are measured by means of a micrometer with pointed noses and ratchet screw.

For the screw shell, two sets of three measurements are made, each set carried out on one of two different generating lines of the screw shell. The mean value of the six measurements shall be at least equal to the specified value.

NOTE 2 The deletion of dimensional requirements is under consideration.

9.4 The effective length of screw engagement, if any, of outer shell and dome shall meet one of the following requirements whereby the engagement shall always be over one full turn.

Either the effective length shall be not less than the values shown in Table 2, or the effective length shall be at least two turns provided the test according to 16.3 is withstood with a torque equal to 1,2 times the torque given in 16.2.

Table 2 – Minimum effective screw lengths

Dimension	Lampholder		
	E14	E27	E40
Minimum effective screw length (mm):			
– Metal lampholders for rolled thread	5,0	7,0	10,0
– Metal lampholders for cut thread	5,0	5,0	7,0
– Lampholders of insulating material	5,0	7,0	10,0

These requirements do not apply to lampholders E5 and E10.

Compliance is checked by measurement.

9.5 The threaded entries of lampholders shall be provided with one of the following screw threads:

– lampholders E14: M10×1;

– lampholders E27: M10×1, M13×1 or M16×1;

– lampholders E40: M13×1, M16×1 (or G3/8A).

NOTE 1 The size between brackets is non-preferred; in addition, the threaded entry M10 is mainly intended for internal wiring of luminaires.

IECNORM.COM : Click to view the full PDF of IEC 60238:2016 RLV

NOTE 2 In France, threaded entry lampholders with 11 mm × 19 TPI and 17 mm × 19 TPI (turns per inch) screw threads are permitted for replacement.

The thread of the entry shall comply with Figure 1a or Figure 1b.

These requirements do not apply to lampholders E5 and E10.

Compliance is checked by measurement and by means of gauges according to Figure 2a or Figure 2b.

In case of doubt, the gauge is introduced into the entry by applying a torque of 0,5 Nm.

9.6 The dimensions of threaded entries and set screws, if any, shall be not less than the values shown in Table 3.

Table 3 – Dimensions of threaded entries and set screws

Dimensions in millimetres

Dimension	Nominal thread diameter	
	M10×1 M13×1	M16×1 G3/8A
Length of the thread:		
– metal entry	3	8
– entry of insulating material	5	10
Diameter of set-screw:		
– screw with head	2,5	3,0
– screw without head:		
– in case of one screw	3,0	4,0
– in case of more than one screw	3,0	3,0

A negative deviation of 0,15 mm from the nominal values for thread diameter is allowed.

Compliance is checked by measurement.

These requirements do not apply to lampholders E5 and E10.

NOTE If it is necessary to take the lampholder apart in order to check compliance with the requirements under 9.3 to 9.6, such checking is done after the test of Clause 18.

9.7 Lampholders shall be so designed that they do not interfere with the proper engagement or disengagement of lamps, even if the lamp cap is slightly dented. In no case shall the holder contacts present a cutting edge to the lamp cap.

Compliance is checked by the following test:

For lampholders E27, compliance shall be checked by means of a gauge according to the current edition of Standard Sheet 7006-22B of IEC 60061-3.

For lampholders other than E27, compliance shall be checked by inspection.

10 Protection against electric shock

10.1 Lampholders E5, E10, E14 and E27 shall be so designed that the lamp caps are not accessible when they become live during insertion.

IECNORM.COM : Click to view the full PDF of IEC 60238:2016 RLV

NOTE 1 Details for checking compliance regarding protection against accidental contact with live parts during insertion for lampholders E5 and E10 are under consideration. Because of this, lampholders E10 with a rated voltage exceeding 60 V are for sale to luminaire or other equipment manufacturers only.

For lampholders E10 with a rated voltage exceeding 60 V, the protection against electric shock can be provided by measures taken in the luminaire or equipment where the lampholders are used.

Lampholders E40 shall be so designed that the lamp cap is not accessible when fully inserted.

Candle lampholders are tested without decorative cover, unless this cover cannot be removed without making the lampholders obviously useless.

Compliance is checked as follows:

– *for lampholders E10, by means of corresponding lamps and the standard test finger, shown in Figure 16. For the purpose of the test, the lampholder manufacturer shall provide the lamps for which the lampholder is intended;*
– *for lampholders E14, E27 and E40, by means of gauges according to the current edition of the following standard sheets of IEC 60061-3:*
  - *7006-31 for lampholders E14;*
  - *7006-22A for lampholders E27;*
  - *7006-24 for lampholders E40.*

NOTE 2 In order to ensure protection against electric shock during insertion on unused lampholders, the tests according to 10.1 are made on new specimens.

10.2 The external parts of enclosed and independent lampholders shall be so designed that live parts of the lampholder ready for use and with a corresponding normal lamp inserted are not accessible.

Candle lampholders are tested without decorative cover, unless this cover cannot be removed without making the lampholder obviously useless.

Compliance is checked by means of the standard test finger.

For the purpose of the test:

– *enclosed lampholders are mounted as in normal use, for example on a threaded support, or the like, if appropriate, and provided with the most unfavourable conductor size fitted for which the lampholders are intended;*
– *independent lampholders shall be mounted as in normal use on an appropriate plane surface.*

The standard test finger shown in Figure 16 is applied in every possible position with a force of 10 N, an electrical indicator being used to show contact with live parts.

It is recommended that a voltage of not less than 40 V be used.

NOTE Unenclosed lampholders are only tested after appropriate installation in a luminaire or other additional enclosure.

For E5 and E10 lampholders with a separate insert part mounted in an outer sleeve, the insert part shall be subjected to a pull force of 60 N for 1 min in the axial direction.

The test shall be performed by hand in order to simulate any axial misalignment as normally occurs in practice. The axial misalignment movement performed during the test should be up to 10° in any direction.

IECNORM.COM : Click to view the full PDF of IEC 60238:2016 RLV

During this test, the insert part shall not become loose to such an extent that live parts become accessible with the standard test finger.

10.3 Parts providing protection against accidental contact with the lamp cap shall be reliably secured so that they will not become detached when a tightly fitting lamp is removed, or when rotating the shade, if applicable.

Compliance is checked by the following test:

The coupling between dome and outer shell is tightened initially with a torque equal to two-thirds of the torque test value specified below. The relevant parts are then subjected to a torque during 1 min in an anticlockwise direction with the following test values:

– *1 Nm for lampholders E14;*
– *2 Nm for lampholders E27.*

The lampholder is mounted as in normal use and is tested first with and then without the appropriate test cap according to Figure 13 (test cap B) or Figure 14.

After the test, the parts providing protection against accidental contact with the lamp cap shall not have become dismantled.

It shall not be possible to dismantle lampholders E5 and E10 without the aid of a tool.

Requirements for lampholders E40 (see Figure 15) are under consideration.

10.4 Where provision is made for attaching a shade to the lampholder, it is fitted to the lampholder by separate means, such as a shade ring; it is not permitted to fix a shade between parts providing protection against electric shock.

Compliance is checked by inspection.

10.5 The external parts of

– drip-proof lampholders,
– lampholders with a rated voltage of more than 250 V,
– switched-lampholders, and
– lampholders E5 and E10

shall be of insulating material, with the exception of threaded entries and of those parts which cannot become live even in the event of a fault.

Lacquer or enamel is not deemed to provide adequate protection for the purpose of Clause 10.

Compliance is checked by inspection.

NOTE 1 Parts which are separated from live parts by double or reinforced insulation are considered as parts which cannot become live in the event of a fault.

NOTE 2 An example of an external part which cannot become live, even in the event of a fault, is a metal shade ring mounted on the outside of an insulated lampholder.

Switched-lampholders with external metal parts are permitted under the conditions of 13.3.

IECNORM.COM : Click to view the full PDF of IEC 60238:2016 RLV

11 Terminals

11.1 Lampholders, other than those provided with connecting leads (tails), shall be provided with terminals which allow connection of conductors having the following nominal cross-sectional areas:

– 0,5 mm^2 to 0,75 mm^2 for lampholders E10;
– 0,5 mm^2 to 1,0 mm^2 for lampholders E14 and E27 with M10×1 threaded entry;
– 0,5 mm^2 to 2,5 mm^2 for other lampholders E27;
– 1,5 mm^2 to 4 mm^2 for lampholders E40 with a rated current of 16 A;
– 2,5 mm^2 to 6 mm^2 for lampholders E40 with a rated current of 32 A.

Compliance is checked by inspection and by fitting conductors of the smallest and largest cross-sectional area specified. For cord-grip lampholders, lampholders E10, E14 and lampholders E27 with M10×1 threaded entry, stranded conductors are used; in all other cases the conductors are of the solid type.

Threaded entry lampholders are tested in a screwed conduit.

Lampholders E27 with screwless terminals intended for use by luminaire or equipment manufacturers only need not fulfil the requirements for all the appropriate nominal cross-sectional areas.

11.2 Connections

11.2.1 Lampholders shall be provided with at least one of the following means of connection:

– screw type terminals;
– screwless terminals;
– tabs or pins for push-on connections;
– posts for wire wrapping;
– soldering lugs;
– connecting leads (tails).

Terminal screws and nuts shall have a metric ISO thread or a thread comparable in pitch and mechanical strength.

Conductors may be connected to E5, E10 and similar small lampholders by soldering, welding, crimping or other equally effective means.

Lampholders with screwless terminals, unless intended for sale to luminaire or equipment manufacturers, shall be provided with terminals which are equally satisfactory with both rigid (solid or stranded) conductors and flexible cables or cords.

Compliance is checked by the tests of 11.2.2.

11.2.2 Terminals shall comply with the following requirements, with the restriction that the requirements referring to internal wiring relate to wiring inside independent holders and to wiring inside luminaires for holders for building-in.

All terminal tests shall be made on separate specimens which have not been subjected to any other test:

IECNORM.COM : Click to view the full PDF of IEC 60238:2016 RLV

– *terminals with screw clamping shall comply with the requirements specified in 11.3 to 11.6 inclusive, and 11.8;*

– *screwless terminals shall comply with Clause 15 of IEC 60598-1, provided that the heating test is carried out at the rated operating temperature of the lampholder ± 5 °C;*

– *tabs or pins for push-on connections shall comply with Clause 15 of IEC 60598-1;*

– *posts for wire wrapping shall comply with IEC 60352-1. Wire wrapping applies only to single solid round wire for internal wiring;*

– *soldering lugs shall comply with the requirements for good solderability. Suitable requirements can be found in IEC 60068-2-20;*

– *connecting leads (tails) shall comply with the requirements specified in 11.10.*

11.3 Terminals shall be fixed in such a way that they will not work loose when fastening or loosening the conductors.

For screw terminals, compliance is checked by inspection and by fastening and loosening a conductor of the largest cross-sectional area specified in 11.1 10 times, the applied torque being two-thirds of the torque specified in Clause 14 of IEC 60598-1.

NOTE Terminals can be prevented from working loose by fixing with one screw in a recess without appreciable play, or by other suitable means. Covering with sealing compound without other means of locking is not deemed to be sufficient.

11.4 Screw terminals shall be so designed that they clamp the conductor between metal surfaces with sufficient contact pressure and without damage to the conductor. Terminals shall be so designed that they will prevent a conductor slipping out when the screws or nuts are tightened. They shall allow a conductor to be connected without special preparation (e.g. soldering of the strands of the conductor, use of cable lugs, formation of eyelets, etc.).

Compliance is checked by inspection of the conductors after fitting according to 11.1 and after the test of 20.3.

NOTE The conductors are considered to be damaged if they show deep or sharp indentations.

11.5 Terminals of the pillar type shall have dimensions not less than those shown in Table 4.

Table 4 – Minimum dimensions of pillar-type terminals

Lampholder	Nominal thread diameter mm	Diameter of hole for conductor mm	Length of thread in pillar mm
E10	2,5	2,5	1,8
E14	2,5	2,5	1,8
E27	2,5	2,5	1,8
E40	3,5	3,5	2,5
The diameter of the hole shall be not more than 0,6 mm larger than the diameter of the screw.			

The length of the threaded part of the terminal screw shall be not less than the sum of the diameter of the hole for the conductor and the length of thread in the pillar.

NOTE The length of the thread of the pillar is measured to the point where the thread is broken by the pillar hole.

Compliance is checked by measurement.

11.6 Screw terminals shall have dimensions not less than those shown in Table 5.

IECNORM.COM : Click to view the full PDF of IEC 60238:2016 RLV

Table 5 – Minimum dimensions of screw-type terminals

Lampholder	Nominal thread diameter mm	Length of thread under the head mm	Length of thread in nut mm	Nominal difference between diameter of head and shank of screw mm	Height of head mm
E10	2,5	4,0	1,5	2,5	1,4
E14	3,0	5,0	1,5	3,0	1,8
E27	3,5	5,0	1,5	3,5	2,0
E40	4,0	6,0	2,5	4,0	2,4

If an intermediate part locked against rotation, such as a washer or a pressure plate, is used between the head of the screw and the conductor, the difference in diameter between head and shank of the screw may be reduced by 1 mm.

Compliance is checked by measurement.

A negative deviation of 0,15 mm from the nominal values of the thread diameter and of the difference in diameter of head and shank is allowed.

NOTE If it is necessary to take the lampholder apart in order to check compliance with the requirements under 11.5 and 11.6, such checking is done after the test of Clause 18.

11.7 Terminals shall be so located that, after correct fitting of the wires, there is no risk of accidental contact between live parts and accessible metal parts.

Compliance is checked by inspection and by the following test:

The insulation is removed over a length of 4 mm from the end of a flexible conductor having the minimum nominal cross-sectional area specified in 11.1. One wire of the stranded conductor is left free and the remainder are fully inserted into and clamped in the terminal of the lampholder, mounted and installed as in normal use (locking screws tightened, etc.).

The free wire is bent without tearing the insulation back, in every possible direction, but without making sharp bends around barriers.

The free wire of a conductor connected to a live terminal shall not touch any metal part which is not a live part, and that of a conductor connected to the earthing terminal shall not touch any live part.

If necessary, the test is repeated with the free wire in another position.

NOTE The prohibition against making sharp bends around barriers does not imply that the free wire is kept straight during the test. Sharp bends are, moreover, made if it is considered likely that such bends can occur during the normal assembly of the lampholder. See also 13.3.

11.8 Pillar terminals in which the end of the conductor is not visible shall have a length of hole beyond the terminal screw at least equal to half the value of the diameter of the screw or 2,5 mm, whichever is the higher.

Compliance is checked by measurement.

11.9 Terminals which are floating shall show no appreciable lateral play and shall not move longitudinally more than 3 mm when a lamp is removed or inserted.

IECNORM.COM : Click to view the full PDF of IEC 60238:2016 RLV

Compliance is checked by measurement.

11.10 The requirements of 11.2 to 11.6 inclusive and of 11.8 do not apply to lampholders intended to be factory-mounted in luminaires and which are provided with connecting leads (tails).

Lampholders intended to be factory-mounted in luminaires or built into equipment may be provided with connecting leads (tails), tab-terminals or equally effective means.

Connecting leads (tails) shall be connected to the lampholders by soldering, welding, crimping or by any other at least equivalent method.

Leads shall consist of insulated conductors.

Insulation of the free end of the leads may be stripped.

Fixing of the leads to the lampholders shall withstand the mechanical forces that may occur in normal use.

Compliance is checked by inspection and by the following test, which is made after the test of 20.2 on the same three specimens.

Each connecting lead is subjected to a pull of 20 N, the pull is applied without jerks for 1 min in the most unfavourable direction.

During the test leads shall not move from their fixing.

After the test, the lampholders shall show no damage within the meaning of this standard.

12 Provision for earthing

12.1 Threaded entry lampholders, cord-grip lampholders and backplate lampholders, with provisions for earthing, other than those provided with connecting leads, shall have at least one internal earthing terminal; other lampholders without threaded entry, for example, lampholders for building-in, may be provided with an external earthing terminal.

Compliance is checked by inspection.

NOTE Lampholders intended to be earthed but not provided with an earthing terminal or with connecting leads are not for retail sale.

12.2 Accessible metal parts of lampholders without earthing terminal, which may become live in the event of an insulation fault, shall allow reliable earthing.

There shall be earth continuity between a metal dome and the outer shell, if of metal, when the shell is not separated from live parts by double or reinforced insulation.

NOTE For the purpose of this requirement, small isolated metal screws and the like for fixing bases or covers are not deemed to be accessible parts which can become live in the event of an insulation fault.

Compliance is checked by the following test:

A rigid conductor having the smallest cross-sectional area for which the holder is intended is fitted to the earthing terminal, if provided.

IECNORM.COM : Click to view the full PDF of IEC 60238:2016 RLV

When earth continuity between the dome and the outer shell also has to be checked, the coupling between these parts shall be tightened with the torque specified:

– *1 Nm for lampholders E14;*
– *2 Nm for lampholders E27;*
– *4 Nm for lampholders E40.*

Immediately after the tests of 15.3, the resistance between the means of earthing and the dome (or the outer shell as appropriate) is measured.

For lampholders with an earthing terminal, the means of earthing is the point where the conductor leaves the terminal and for lampholders without an earthing terminal, it is the point where the earthing connection is intended to be made.

A current of at least 10 A, derived from a source with a no-load voltage not exceeding 12 V, shall be passed between the earthing terminal or earthing contact and each of the accessible metal parts in turn.

The voltage drop between the means of earthing and accessible metal part shall be measured. The resistance, calculated from the voltage drop and the current, shall not exceed 0,1 Ω.

12.3 Earthing terminals shall comply with the requirements of Clause 11.

Their clamping means shall be adequately locked against accidental loosening, and it shall not be possible to loosen screw terminals by hand and screwless terminals unintentionally by hand.

Compliance is checked by inspection and by the tests of Clause 11.

NOTE In general, the designs commonly used for current-carrying terminals (complying with the requirements of this standard) provide sufficient resilience to comply with the latter requirement; for other designs special provisions, such as the use of an adequate resilient part which is not likely to be removed inadvertently, may be necessary.

12.4 The metal of earthing terminals shall be such that there is no risk of corrosion resulting from contact with the copper of the earthing conductor.

The screw or the body of the earthing terminal shall be of brass or other metal no less resistant to corrosion, and the contact surfaces shall be bare metal.

Compliance is checked by inspection.

NOTE The risk of corrosion is particularly great when copper is in contact with aluminium.

12.5 Metal parts of the cord anchorage, including clamping screws, shall be insulated from the earthing circuit.

Compliance is checked by inspection.

13 Construction

13.1 Lampholders shall be provided with a screw thread of Edison form for holding the lamp.

IECNORM.COM : Click to view the full PDF of IEC 60238:2016 RLV

For lampholders other than E5 and E10, this thread shall be either of metal and shall be continuous over a length not less than that specified in the current edition of standard sheet 7005-20 of IEC 60061-2, or comply with the following requirements.

NOTE The requirement for a minimum length of screw thread for lampholders E5 and E10 is under consideration.

Deviation from the requirements for a metal thread is allowed provided the design and production tolerances are such that proper engagement with all gauges is ensured throughout the life of the holder delivered. On this subject, further information will be available in the annex: Surveillance tests, under consideration.

In addition, the terminal/contact assembly and the screw shell shall be so constructed and located as to prevent canting or rotation which would impair the use of the lampholder.

Deviation from the requirement for a continuous thread is allowed if this is necessary to provide a special technical advantage, such as the inclusion of a lamp retention device in a cut-away.

Compliance is checked by inspection and by a manual test with the relevant gauges, referred to in Clause 8, applied in all positions which can be achieved with reasonable force, and the holder shall still comply with the gauges, especially the feeler gauge of 0,08 mm × 5,0 mm.

Furthermore, it shall not be possible to score the neck of the bulb of a lamp made to normal standards during engagement and disengagement.

The male screw thread of an adapter shall be of the same size or larger than the female screw thread shell of the adapter.

13.2 There shall be adequate space for the supply wires in the dome of the lampholder. Parts of the lampholder with which insulated conductors may come into contact shall have no sharp edges or a shape likely to damage the insulation.

Threaded entry lampholders shall be provided with means to prevent the conduit entering too far into the entry, unless it is evident from the design that the conduit is unlikely to enter too far into the entry, for example in certain candle lampholders.

Compliance is checked by inspection and by fitting flexible cables or cords of the largest cross-sectional area according to 11.1 for lampholders E14 and lampholders E27 with M10×1 threaded entries, with conductors with a nominal cross-sectional area one size less than specified for other lampholders E27 and lampholders E40.

For cord-grip lampholders, lampholders E14 and lampholders E27 with M10×1 threaded entries, an ordinary sheathed flexible cord is used; in all other cases, two or three PVC insulated single-core cables are used.

For threaded entry lampholders, the dome of the lampholder is screwed onto a conduit having a length of about 10 cm. The cables are then introduced into the conduit and dome. The ends of the cables, after having been prepared in the usual manner, are connected to the terminals of the lampholder. If possible, the connection is made with the part carrying the terminals in a position where the shortest distance between the plane of the upper edge of the dome and the nearest part of the terminals is 10 mm. With the terminals held in this position, the cables are tightened and clamped at the free end of the conduit. After this, the lampholder is assembled.

After dismantling, the cables and cords shall not be damaged.

NOTE 1 For lampholders E27 and E40, a test with conductors with maximum cross-sectional area according to 11.1 is under consideration.

IECNORM.COM : Click to view the full PDF of IEC 60238:2016 RLV

NOTE 2 The requirement concerning sharp edges is not meant for the outer end of the threaded entry, since they are not in contact with the wires when the lampholder is mounted on a conduit.

In case of doubt with regard to the means to prevent the conduit entering too far into the entry of a threaded entry lampholder, the lampholder is screwed onto a steel conduit or mandrel having squared ends (edges left sharp). The conduit or the mandrel is provided with a full thread having the minimum dimensions shown in Figure 1a or Figure 1b.

During this test, the following torque is applied for 1 min:

– *1,0 Nm for threaded entries M10×1;*
– *1,3 Nm for threaded entries M13×1;*
– *1,6 Nm for threaded entries M16×1 and G3/8A.*

After this test, the conduit or the mandrel shall not have entered into the space provided for the supply wires in the dome of the lampholder, and the lampholder shall not show any change impairing its further use.

13.3 Accessible parts of switched lampholders shall be of insulating material unless the design is such that a live wire detached from its terminal cannot touch accessible metal parts or parts of the earthing circuit and that terminal screws or screws in threaded entries which have become loose cannot bridge accessible metal parts, including earthing terminals, and live parts.

Compliance is checked by inspection.

NOTE This requirement does not necessarily imply either complete or partial insulating lining.

13.4 In case of lampholders with metal screw shell and metal outer shell, contact between these parts shall be prevented by an insulating ring which shall not be separable from the live parts or the metal outer shell by hand.

Compliance is checked by inspection.

NOTE The protection by the insulating ring is considered sufficient if its length is approximately equal to that of the screw shell.

13.5 It shall be possible to lock the threaded entry on the conduit. Locking devices can either be part of the lampholder or be provided by the design of a luminaire.

Except for angled lampholders, it shall be possible to operate the locking device from the inside, if provided as part of the lampholder.

If a locking device is provided by the design of a luminaire, its efficiency cannot be checked when testing the lampholder; such a check shall be made during testing of the luminaire.

NOTE Such lampholders are not intended for retail sale.

This requirement does not apply to lampholders E5 and E10.

Compliance is checked by inspection and, for lampholders having an integral locking device, by the test of 16.4.

13.6 Cord-grip lampholders and all lampholders designed for chain connection shall be provided with a device allowing the lampholder to be so fixed to a flexible cord that the conductors are relieved from strain, including twisting, where they are connected to the terminals, and that the outer covering of the cord is gripped in the lampholder and is protected from abrasion. It shall be clear how the relief from strain and the prevention of twisting is intended to be effected.

IECNORM.COM : Click to view the full PDF of IEC 60238:2016 RLV

It shall not be possible to push the cord into the lampholder to such an extent that the cord is subjected to undue mechanical or thermal stress.

Makeshift precautions, such as tying the cord into a knot or tying the end with string, are not permissible.

The device shall be of insulating material or be provided with a fixed insulating lining if otherwise an insulation fault on the cord could make accessible metal parts live.

The design shall be such that the device:

– is at least one part fixed to or integral with the lampholder;
– is suitable for the different types of flexible cord which may be connected to the lampholder;
– does not exert excessive pressure on the cord;
– is unlikely to be damaged when it is tightened or loosened as in normal use.

The device shall be suitable for flexible cords of the following types:

– 60245 IEC 51;
– 60245 IEC 53 or the like;
– 60227 IEC 52.

Compliance is checked by inspection and by the following test:

The lampholder is fitted with a flexible cord, the device for strain and twist relief being appropriately used. The conductors are introduced into the terminals and the terminal screws are slightly tightened, so that the conductors cannot easily change their position. After this preparation, it shall not be possible to push the cord further into the lampholder.

The flexible cord is then subjected 100 times to a pull of the appropriate value shown in the Table 6, each for a duration of 1 s. The pull shall not be applied in jerks.

Immediately afterwards, the flexible cord is subjected for a period of 1 min to a torque as specified in Table 6.

Table 6 – Pull and torque values

Total nominal cross-sectional area of all conductors together mm^2	Pull N	Torque Nm
Up to and including 1,5	60	0,15
Over 1,5 up to and including 3	60	0,25
Over 3 up to and including 5	80	0,35
Over 5 up to and including 8	120	0,35

The lampholders are tested with each of the appropriate types of cord, as specified before, complying with IEC 60245 or IEC 60227.

The test is first made with conductors of the smallest cross-sectional area specified in 11.1 as well as with conductors of either the largest cross-sectional area allowed by the suspending device or the largest cross-sectional area specified in 11.1, whichever is the smaller.

IECNORM.COM : Click to view the full PDF of IEC 60238:2016 RLV

For lampholders designed for chain connection, the test is carried out with the cables for which the lampholder is designed. The cable is subjected 50 times to a pull of 30 N. The torque test is not carried out.

During the test, no damage to the flexible cord shall be caused by the device for strain and twist relief. At the end of the test, the cord shall not have been displaced by more than 2 mm, and the ends of the conductors shall not have been noticeably displaced in the terminals.

In order to enable the displacement to be measured, before starting the test, a mark is made on the cord under strain at a distance approximately 2 cm from the strain-relieving device. At the end of the test, the displacement of this mark in relation to the strain device is measured while the cord is still under strain.

13.7 Suspending devices of enclosed and independent lampholders shall have no accessible metal parts which can become live, even in the event of a fault in the lampholder. Moreover, suspending devices intended to be screwed into threaded entry lampholders shall comply with the requirements of 13.2.

Compliance is checked by inspection and by the test of 13.6.

13.8 Backplate lampholders not specifically intended for building-in shall have a recess for supply wires. This recess shall have the following minimum dimensions in order to allow back entry from a conduit perpendicular to the mounting surface of the lampholder:

– height 7 mm;
– length equal to diameter or width of the base;
– width 16 mm enlarged to a circular space 23 mm in diameter in the centre.

Compliance is checked by measurement.

The dimensional requirement does not apply to lampholders E5 and E10.

13.9 The base of backplate lampholders, other than those specifically intended for building-in, shall be suitable for fixing by means of screws with a diameter of at least 4 mm.

Compliance is checked by means of a gauge according to Figure 3. For this test, the plug is inserted into the hole from the back and the bush is placed on the plug from the front.

The bush shall enter the recess for the screw head.

This requirement does not apply to lampholders E5 and E10.

13.10 Where provision for cable entry/entries is made on the accessible external surface of a backplate lampholder, they shall allow the introduction of cable covering, conduit or trunking etc., as appropriate, so as to afford mechanical protection at least for a distance of 1 mm measured from the accessible external surface of the backplate lampholder.

Compliance is checked by measurement and by the installation test of 11.1.

13.11 The contacts shall be designed and constructed so as to ensure during normal use effective and reliable electrical contact.

The functioning of the contacts shall be independent of the functioning of an optional locking device between the dome and the outer shell.

New E40 lampholder designs shall be of the contact-making shell type.

IECNORM.COM : Click to view the full PDF of IEC 60238:2016 RLV

NOTE Contact-making problems with actual lamp caps have shown that the contact-making shell type is the only practical solution in this respect.

Compliance is checked by inspection and by the test of 20.2.

A single side-contact is allowed.

13.12 Lampholders shall not be fitted with a socket-outlet.

Compliance is checked by inspection.

13.13 Devices for bridging the lamp filament shall not be integral with the lampholder.

Compliance is checked by inspection and, if necessary, by test.

13.14 Lampholders with a retention device shall be able to withstand a certain unscrewing torque.

A commercially available brass lamp cap complying with the relevant standard sheets shall be inserted into the sample lampholder with retention device, with a torque according to the type of lampholder as specified in Table 7.

Table 7 – Insertion torque

Lamp cap	Torque Nm
E27	1,5 ± 0,1
E40	2,0 ± 0,1

The lamp is then unscrewed for about 30°. In this position, the removal torque is measured.

The removal torque shall not be less than the minimum value and shall not exceed the maximum value specified in Table 8.

Table 8 – Minimum and maximum removal torques

Lamp cap	Minimum torque Nm	Maximum torque Nm
E27	0,5	2,0
E40	1,0	4,0

When the lamp cap is damaged or is showing wear, a new cap should be used for the tests.

14 Switched lampholders

14.1 Switches are allowed only in ordinary lampholders E14 and in ordinary lampholders E27 for use up to and including 250 V.

Compliance is checked by inspection.

14.2 Switched lampholders shall comply with the constructional requirements of 13.3 and with the additional requirements of 14.3 to 14.5, or with the relevant requirements given in IEC 61058-1.

IECNORM.COM : Click to view the full PDF of IEC 60238:2016 RLV

NOTE Guidance for the selection of the relevant requirements in IEC 61058-1 is given in Annex B.

14.3 Switches in lampholders shall be capable of making and breaking a load comprising a filament lamp or self-ballasted lamp for general lighting service (GLS).

Compliance is checked by the following tests:

Switches in lampholders E14 shall be tested for an operating temperature of 100 °C, and switches in lampholders E27 shall be tested for an operating temperature of 125 °C.

Switches in lampholders intended for use in refrigerators or food freezers shall be tested at the rated operating temperatures.

Switches in lampholders with temperature marking shall be tested for operating temperatures as follows:

– *lampholders E14: the temperature marking of the lampholder minus 40 °C,*
– *lampholders E27: the temperature marking of the lampholder minus 50 °C.*

The switch is tested with alternating current (cos φ = 0,6 ± 0,05) at 1,1 times rated voltage and 1,25 times rated current.

The switch shall be operated in a normal manner for 200 switch movements at a rate of 30 movements per minute at regular intervals.

The switch is then tested with alternating current (cos φ = 1) at rated voltage and rated current.

The switch shall be operated in a normal manner for 20 000 switch movements at a rate of 30 movements per minute at regular intervals.

NOTE Replacement of the above test by the corresponding test of IEC 61058-1 is under consideration.

At the conclusion of the test, the lampholder shall withstand the tests specified in 15.4 for insulation resistance and electric strength and shall be in satisfactory working order.

14.4 Switched lampholders shall be so constructed that accidental contact between moving parts of the switch and the supply wires is prevented.

Compliance is checked by the test of 11.1 and by a manual test.

14.5 The switch-operating member shall be effectively insulated from live parts and, if it is broken or damaged, it shall not expose live parts.

Compliance is checked by inspection and by the tests specified in 14.3.

14.6 Switches in lampholders intended for use in refrigerators or food freezers may be tested with a lamp according to the expected wattage rating for lamps of the appliance.

15 Moisture resistance, insulation resistance and electric strength

15.1 The enclosure of drip-proof lampholders shall provide the necessary degree of protection against ingress of water.

Compliance is checked by the following test.

IECNORM.COM : Click to view the full PDF of IEC 60238:2016 RLV

Lampholders are fitted with the cables or conduits for which they are designed.

Backplate lampholders are mounted on a vertical surface with one drain hole, if any, open and directed downwards. Other lampholders are mounted with their lamp entry pointing vertically downwards.

The test is made by means of equipment, the principle of which is shown in Figure 3 of IEC 60529:1989. The rate of discharge shall be reasonably uniform over the whole area of the apparatus and shall produce a rainfall of between 3 mm and 5 mm of water per minute, falling vertically from a height of 200 mm measured from the lampholder. The test duration is 10 min. The water used for the test shall be at a temperature of 15 °C ± 10 °C.

Immediately after this treatment, the lampholder shall withstand the same electric strength test as specified in 15.4, and inspection shall show that water has not entered to an appreciable extent.

NOTE It is considered that water has entered to an appreciable extent if it has come into contact with live parts. In this case, a screw shell which is only live when a lamp is inserted is not considered as a live part.

15.2 Inlet openings of drip-proof lampholders shall allow the connection of the supply wires in such a way that drops of water running along the wires cannot reach the inside of the lampholder.

Compliance is checked by inspection.

15.3 Lampholders shall be proof against humid conditions which may occur in normal use.

Compliance is checked by the humidity treatment described in 15.3 followed immediately by the measurement of the insulation resistance and by the electric strength test specified in 15.4.

Cable entries, if any, are left open; if knock-outs are provided, one of them is opened.

The humidity treatment is carried out in a humidity cabinet containing air with a relative humidity maintained between 91 % and 95 %. The temperature of the air, at all places where specimens can be located, is maintained within 1 °C of any convenient value t between 20 °C and 30 °C.

Before being placed in the humidity cabinet, the specimens are brought to a temperature between t and $(t + 4)$ °C.

Lampholders are kept in the cabinet:

- *two days (48 h) for ordinary lampholders;*
- *seven days (168 h) for IPX1 drip-proof lampholders.*

NOTE 1 In most cases, the specimens can be brought to the specified temperature by keeping them at this temperature for at least 4 h before the humidity treatment.

NOTE 2 Relative humidity between 91 % and 95 % can be obtained by placing in the humidity cabinet a saturated solution of sodium sulphate (Na_2SO_4) or potassium nitrate (KNO_3) in water, having a sufficiently large contact surface with the air. In order to achieve the specified conditions within the cabinet using this method, it is important to ensure constant circulation of the air within and, in general, to use a cabinet which is thermally insulated.

After this treatment, the lampholders shall show no damage within the meaning of this standard.

15.4 The insulation resistance and the electric strength shall be adequate:

IECNORM.COM : Click to view the full PDF of IEC 60238:2016 RLV

a) between live parts of different polarity;

b) between such live parts and external metal parts, including fixing screws of the base or enclosure of backplate lampholders, and accessible assembling screws;

c) between the inner and outer surfaces of the lining of metal enclosures, if such accessible lining is required in accordance with 13.3 to give protection or if the distance between any live part and the metal of the enclosure is smaller than that required under footnote b in Tables 13a and 13b.

Compliance is checked by an insulation-resistance measurement and an electric strength test made immediately after the humidity treatment in the humidity cabinet, or in the room in which the specimens were brought to the prescribed temperature.

The insulation resistance is measured with a DC voltage of approximately 500 V, the measurement being made 1 min after application of the voltage.

The insulation resistance is measured consecutively:

a) between live parts of different polarity;

b) between such live parts connected together and the body;

c) between accessible metal parts and metal foil in contact with the inner surface of insulating lining, if any.

The term "body" used in item b) includes external metal parts, fixing screws of the base and of the enclosure, accessible assembling screws and metal foil in contact with the surface of external insulating parts.

Measurements prescribed in items a) and b) are first made on the lampholder in which the test cap shown in Figure 11 is inserted and then on the empty lampholder.

The switch, if any, is placed in the "on" position.

If metal foil is used for the test on the empty lampholder, it shall also be in contact with the metal screw shell if this shell has to be insulated from the contacts.

The insulation resistance shall be not less than:

– *2 MΩ for the measurement according to item a);*

– *4 MΩ in all other cases.*

Immediately after the insulation resistance test, an AC voltage of substantially sine wave form, with a frequency of 50 Hz or 60 Hz and with an r.m.s. value of (2 U + 1 000) V (where U is the rated voltage) is applied for 1 min between the points prescribed. For enclosed and unenclosed reinforced insulated lampholders, the test voltage shall be determined from Table 10.2 of IEC 60598-1. Additionally, for switched lampholders, this voltage shall be applied between live parts of different polarity and other metal parts with the switch both closed and open.

The electric strength test voltage between live parts of different polarity for lampholders E5 and E10 with a rated voltage not exceeding 60 V is reduced to 500 V.

Initially, not more than half the prescribed voltage is applied, it is then raised rapidly to the full value.

No flashover or breakdown shall occur during the test.

IECNORM.COM : Click to view the full PDF of IEC 60238:2016 RLV

The high-voltage transformer used for the test shall be so designed that, when the output terminals are short-circuited after the output voltage has been adjusted to the appropriate test voltage, the output current is at least 200 mA.

The overcurrent relay shall not trip when the output current is less than 100 mA.

Care is taken that the r.m.s. value of the test voltage applied is measured within ±3 %.

Glow discharges without drop in voltage are neglected.

16 Mechanical strength

16.1 Lampholders shall have adequate mechanical strength and shall withstand the strain due to the insertion of a lamp as well as that caused by the screwing of the lampholder to a conduit.

Compliance is checked by the tests of 16.2 to 16.7.

With the exception of candle lampholders, brackets or similar devices for the mounting or attachment of lampholders are not covered by the requirements of Clause 16. The mechanical strength of such devices shall comply with the requirements of the standard for the equipment for which the lampholder is intended.

16.2 The mechanical strength of the outer shell, the screw shell and the dome is checked by screwing a test cap (see Figures 13, 14 and 15) into the specimen, the following torque being applied for 1 min:

– 0,3 Nm for lampholders E5;
– 0,3 Nm for lampholders E10;
– 0,5 Nm for candle lampholders E14, when the lampholder is fixed by the threaded entry;
– 1,2 Nm for candle lampholders E14, when the lampholder is clamped by the outer shell;
– 1,2 Nm for other lampholders E14;
– 2 Nm for lampholders E27;
– 4 Nm for lampholders E40.

The test cap dimensions are as specified in Table 9.

Table 9 – Test cap dimensions

Lampholder	Dimension S [a] mm	Diameter of central contact mm
E14	5,5	4,8
E27	9,5	9,5
E40	11,0	14,0
[a] For the meaning of dimension S, see Figures 13, 14 or 15.		

The dimensions of the test caps for lampholders E5 and E10 are under consideration. For the time being, the test is carried out with a cap having the same dimensions as the cap of the lamp for which the lampholder is designed.

The test is made twice: first with the specimen clamped at the outer shell and secondly with the specimen fixed by the threaded entry, dome or backplate, according to type of lampholder.

IECNORM.COM : Click to view the full PDF of IEC 60238:2016 RLV

At the end of the test, the specimen shall not show any change impairing its normal use.

16.3 The dome or backplate of the specimen is fixed and a torque as indicated under 16.2 is applied to the outer shell for 1 min so as to tighten the screwed connection between shell and dome.

This test shall cause neither loosening of the connection between shell and dome nor any other damage.

The test does not apply to lampholders E5 and E10.

16.4 *The dome of threaded entry lampholders is fixed to a brass conduit in the normal way, the set-screws being tightened with a torque equal to the values indicated in Table 12. The locking of the screwed entry is tested by the application for 1 min of a torque as indicated under 16.2, but in an anti-clockwise direction.*

The application of this torque shall not loosen the threaded entry from the brass conduit.

If, however, the threaded entry loosens, the set-screw is further tightened with the smallest torque necessary to prevent the entry from loosening during this test, and this minimum value is noted.

NOTE It is practical to increase the torque by increments of about 20 % during this test.

The minimum value of the torque applied is noted for the purpose of the test of 17.1.

For the tests under 16.2 to 16.4, the use of an apparatus according to Figure 6 is recommended.

16.5 The strength of the connection between dome and threaded entry is checked as indicated in Figure 12.

The specimen is fixed by the threaded entry in a horizontal position. A mandrel with a thread having the maximum IEC dimensions acceptable for caps, and with other dimensions according to Figure 12, is screwed into the lampholder and is loaded for 1 min with a mass, as indicated in Figure 12. The end of the mandrel shall not sag more than 5 mm.

The specimen shall not be damaged. If a permanent deformation occurs, the specimen is forced into the original position and the test is repeated five times, after which the specimen shall show no damage impairing its normal use.

This test does not apply to candle lampholders.

16.6 The mechanical strength of the outer shell of insulating material with or without a conductive outer surface and of insulating rings between the screw shell and the exterior of metal lampholders is checked by means of the pendulum hammer test specified in IEC 60068-2-75 (see Figure 8), subject to the following details (see 3.9 of IEC 60068-2-75:2014).

a) Method of mounting:

The specimen shall be held against the plywood sheet of the mounting fixture in such a manner that its axis is horizontal and parallel to the support and its outer edge touches the plywood.

NOTE For lampholders different from the cylindrical shape, the condition of the axis parallel to the plywood sheet can be obtained by adequate pine wood shimmings.

b) Height of fall:

IECNORM.COM : Click to view the full PDF of IEC 60238:2016 RLV

The striking element shall fall from one of the heights given in Table 10.

Table 10 – Heights of fall

Material	Height of fall mm
Ceramic parts	100 ± 1
Parts made of other material	150 ± 1,5

Candle lampholders, if tested without decorative covers, shall, however, be tested with a height of fall of 100 mm.

c) Number of impacts:

Four blows shall be applied to points equally divided over the circumference of the outer edge of the shell and of the ring.

For lampholders of insulating material, the outer shell shall be hit at the outer edge. For metal lampholders, the outer shell shall be hit at the position of the insulating ring between the screw shell and the exterior.

For such candle lampholders as prescribed in b), one blow shall be applied in two places at 90° on the circumference. The blows shall be applied at 5 mm from the outer edge of the lampholder.

d) Pre-conditioning:

Not applicable.

e) Initial measurements:

Not applicable.

f) Attitudes and impact locations:

See c) above.

g) Operating mode and functional monitoring:

The sample shall not operate during impact.

h) Acceptance and rejection criteria:

After the test, the sample shall show no serious damage within the meaning of this standard, in particular

1) live parts shall not have become accessible.

Damage to the lampholder which does not reduce creepage distances or clearances below the values specified in Clause 18 and small chips which do not adversely affect the protection against electric shock or ingress of water shall be ignored;

2) cracks not visible to the naked eye and surface cracks in fibre-reinforced mouldings and the like shall be ignored.

Cracks or holes in the outer surface of any part of the lampholder shall be ignored if the lampholder complies with this standard even if that part is omitted.

i) Recovery:

Not applicable.

j) Final measurements:

See h) above.

The mechanical strength of lampholders E5 and E10 shall be checked by means of the free fall test specified in IEC 60068-2-32:1975.

The lampholder E5 or E10 shall withstand, without damage affecting safety, 50 falls of 500 mm onto a 3 mm thick steel plate in the tumbling barrel (see Figure 7) turning at 5 r/min (that is 10 falls per minute).

IECNORM.COM : Click to view the full PDF of IEC 60238:2016 RLV

NOTE The mechanical strength of lampholders used in luminaires or other equipment can be checked by means of the spring hammer specified in IEC 60068-2-75. In IEC 60598-1, the test impact energy used varies from 0,2 Nm to 0,7 Nm depending on component material and luminaire type.

Additionally, for lampholders provided with a snap-on outer shell the following tests are carried out.

A push and a pull force along the lampholder axis is applied for 1 min. to the outer shell by means of a mass of 5 kg.

After this test the outer shell shall have remained in its intended position.

Additionally it shall not be possible to remove the outer shell by use of the standard fingertip, applied in all possible positions, with a force of 30 N.

16.7 *For metal lampholders the mechanical strength of external metal parts (outer shell and dome) is tested by means of an apparatus according to Figure 9.*

The various parts are tested on the complete lampholder. Each part is subjected twice for 1 min to a pressure as indicated in Table 11; the pressure is applied on two diameters at right angles to each other. The test is not made on outer shells and domes of insulating material with a conductive outer surface.

During and after the test, the deformation of the specimen shall not exceed the values indicated in Table 11.

Table 11 – Maximum deformation values

Lampholder	Pressure	Maximum deformation	
		During the test	After the test
	N	mm	mm
E14	75	1	0,3
E27	100	2	0,3
E40	100	4	0,5

This test does not apply to lampholders E5 and E10 and similar small lampholders.

16.8 Entry spouts and glands shall withstand the mechanical stresses occurring during normal fitting and use.

Compliance is checked by the following test.

Screwed glands are fitted with a cylindrical metal rod having a diameter equal to the nearest whole number of millimetres below the internal diameter of the packing. The glands are then tightened by means of a suitable spanner, a force of 30 N for metal glands, or 20 N for glands of moulded material, being applied for 1 min, at a radius of 25 cm.

At the end of the test, the glands, the spouts and the enclosures shall show no damage.

16.9 Backplate lampholders shall be designed to withstand fixing to a support without damage.

Compliance is checked by the following test.

The backplate of the lampholder is fixed by means of 4 mm screws to a rigid flat steel sheet. This sheet has two drilled and tapped holes at a distance equal to the distance between the

IECNORM.COM : Click to view the full PDF of IEC 60238:2016 RLV

axes of the fixing holes of the backplate. The screws are gradually tightened, the maximum torque applied being 1,2 Nm.

The backplate of lampholders shall be fixed by means of screws to a rigid flat steel sheet as follows:

– *3 mm screws for lampholders E10;*
– *4 mm screws for lampholders other than E10.*

The screws shall be gradually tightened, the maximum torque applied being:

– *0,5 Nm for 3 mm screws, and*
– *1,2 Nm for 4 mm screws.*

These requirements do not apply to lampholders E5.

For backplate lampholders specifically intended for building-in, this test is carried out with the means of attachment specified by the manufacturer.

After this test, the backplate lampholder shall show no damage impairing its further use.

17 Screws, current-carrying parts and connections

17.1 Screws and mechanical connections, the failure of which might cause the holder to become unsafe, shall withstand the mechanical stresses occurring in normal use.

Compliance is checked by inspection and by the following test.

NOTE 1 Screwed connections are already partially checked by the tests of Clause 16.

Screws and nuts which may be operated when connections are made to the lampholders are tightened and loosened

– *five times for screws operating in a female thread in metal;*
– *ten times for screws operating in a female thread in insulating material*

by means of a suitable test screwdriver applying a torque as indicated in Table 12, except for set-screws tightened with an increased torque during the test of 16.4 when the increased torque is applied. Column 1 applies to screws without heads if the screw, when tightened, does not protrude from the hole. Column 2 applies to other screws. Screws operating in a female thread in insulating material are each time completely removed and reinserted.

The test shall cause no damage impairing the further use of the screwed connections.

IECNORM.COM : Click to view the full PDF of IEC 60238:2016 RLV

Table 12 – Torque values

Nominal diameter of screw mm	Torque Nm	
	1	**2**
Up to and including 2,8	0,2	0,4
Over 2,8 up to and including 3,0	0,25	0,5
Over 3,0 up to and including 3,2	0,3	0,6
Over 3,2 up to and including 3,6	0,4	0,8
Over 3,6 up to and including 4,1	0,7	1,2
Over 4,1 up to and including 4,7	0,8	1,8
Over 4,7 up to and including 5,3	0,8	2,0
Over 5,3 up to and including 6,0	–	2,5
Over 6,0 up to and including 8,0	–	8,0
Over 8,0 up to and including 10,0	–	17,0
Over 10,0 up to and including 12,0	–	29,0
Over 12,0 up to and including 14,0	–	48,0
Over 14,0 up to and including 16,0	–	114,0
NOTE Column 1 applies to screws without heads if the screw, when tightened, does not protrude from the hole. Column 2 applies to other screws.		

NOTE 2 Screws to be operated when connections are made to the holder include, for example, screws for fixing covers when they have to be loosened for making connections, etc. Conduit thread connections and screws to fasten the holders to their supports are excluded.

The shape of the blade of the test screwdriver shall suit the slot of the screw to be tested. The screw shall not be tightened in jerks.

17.2 In the case of screws operating in a thread in insulating material, the length of the thread shall be not less than 3 mm plus one-third of the nominal screw diameter, except that this length need not exceed 8 mm.

Correct introduction of the screw into the thread shall be ensured.

Compliance is checked by inspection, by measurement and by a manual test.

NOTE The requirement with regard to the correct introduction is met if introduction of the screw in a slanting manner is prevented, for example by guiding the screw by the part to be fixed, by a recess in the female thread or by the use of a screw with the leading thread removed.

17.3 Electrical connections shall be so designed that contact pressure is not transmitted through insulating material other than ceramic, unless there is sufficient resiliency in the metal parts to compensate for any possible shrinkage of the insulating material.

Screws shall not be of a metal which is soft or liable to creep, such as zinc or aluminium.

Screws transmitting contact pressure and screws with a nominal diameter of less than 3 mm which may be operated when connections are made to the lampholder, shall screw into a metal nut or metal insert; locking screws are excepted from this requirement.

Compliance is checked by inspection.

17.4 Screws and rivets, which serve as electrical as well as mechanical connections, shall be locked against loosening.

IECNORM.COM : Click to view the full PDF of IEC 60238:2016 RLV

Compliance is checked by inspection and by a manual test.

NOTE 1 Spring washers can provide satisfactory locking. For rivets, a non-circular shank or an appropriate notch can be sufficient for locking.

NOTE 2 Sealing compound which softens on heating provides satisfactory locking only for screw connections not subject to torsion during normal use.

17.5 Current-carrying parts shall be of copper, an alloy containing at least 50 % copper or material having characteristics at least equivalent.

This requirement does not apply to screws which do not essentially contribute to the current conduction such as terminal screws.

Compliance is checked by inspection and, if necessary, by chemical analysis.

The tests of Clauses 19 and 22 will show whether current-carrying parts are equivalent to copper in respect to current-carrying capacity, mechanical strength and corrosion likely to be met in normal service.

Special care should be taken with regard to corrosion and mechanical properties.

18 Creepage distances and clearances

18.1 Creepage distances and clearances shall be not less than the values shown in Tables 13a and 13b, the lampholder being fitted as in normal use and a lamp being inserted into or removed from the lampholder.

The central contact of the lamp cap shall have a diameter of

– 2,4 mm for lampholders E5;
– 3,8 mm for lampholders E10;
– 5,5 mm for lampholders E14;
– 10,5 mm for lampholders E27;
– 16,0 mm for lampholders E40.

The movement of any floating part shall be so limited as to prevent a decrease of creepage distances or clearances below the specified values.

The distances specified in Table 13a apply to impulse withstand category II, the distances specified in Table 13b apply to impulse withstand category III in accordance with IEC 60664-1. Both tables refer to pollution degree 2, where normally only non-conductive pollution occurs but occasionally a temporary conductivity caused by condensation is to be expected.

NOTE 1 IEC 60664-1 gives information on distances for other impulse withstand categories and higher pollution degrees.

Attention is drawn to the fact that the values for creepage distance and clearance given in Clause 18 are the absolute minimum.

NOTE 2 The voltages shown in Tables 13a and 13b are rated voltages, not ignition voltages.

IECNORM.COM : Click to view the full PDF of IEC 60238:2016 RLV

Table 13a – Minimum distances for AC (50/60 Hz) sinusoidal voltages: Impulse withstand category II

Distances mm	Rated voltage V			
	50	**150**	**250**	**500** [b]
1 Between live parts of different polarity, and 2 Between live parts and external metal parts, if not covered with insulating material: (this includes screws of backplate lampholders)				
Basic insulation				
– Creepage distances: insulation PTI ≥ 600 [a]	0,6	0,8	1,5	3
PTI < 600 [a]	1,2	1,6	2,5	5
– Clearances [b]	0,2	0,8	1,5	3
Reinforced insulation				
– Creepage distances: insulation PTI ≥ 600 [a]	–	1,6	3	6
PTI < 600 [a]	–	3,2	5	6
– Clearances	–	1,6	3	6
3 Clearances for backplate lampholders [c] – between live parts of different polarity, and – between live parts and the boundary of the space for the supply wires in backplate lampholders not specifically intended for building in:	0,6	0,8	1,5	3

[a] PTI means Proof Tracking Index, in accordance with IEC 60112:2003/AMD1:2009.

In the case of creepage distances to parts not energized or not intended to be earthed, where no tracking can occur, the values specified for material with PTI ≥ 600 apply for all materials (independent of the real PTI).

For creepage distances subjected to working voltages of less than 60 s duration, the values specified for materials with PTI ≥ 600 apply for all materials.

For creepage distances not liable to contamination by dust or moisture, the values specified for material with PTI ≥ 600 apply (independent of the real PTI).

[b] Clearances between live parts and a non-live screw shell in an empty lampholder (unscrewed lamp) shall not be less than 2 mm.

[c] These values take account of possible unevenness of the mounting surface.

NOTE Values for creepage distances and clearances can be found for intermediate values of rated voltages by linear interpolation between tabulated values. No values are specified for rated voltages below 25 V as the voltage test of 15.4 is considered sufficient.

IECNORM.COM : Click to view the full PDF of IEC 60238:2016 RLV

Table 13b – Minimum distances for AC (50/60 Hz) sinusoidal voltages: Impulse withstand category III

Distances mm	Rated voltage V			
	50	**150**	**250**	**500** [b]
1 Creepage distances and clearances between live parts of different polarity	0,6	0,8	1,5	3
2 Between live parts and external metal parts, if not covered with insulating material: (this includes screws of backplate lampholders)				
Creepage distances:				
insulation PTI ≥ 600 [a]	0,6	1,5	3	4
PTI < 600 [a]	1,2	1,6	3	5
Clearances [b]	0,2	1,5	3	4
3 Clearances for backplate lampholders [c] – between live parts of different polarity, and – between live parts and the boundary of the space for the supply wires in backplate lampholders not specifically intended for building in:	0,6	1,5	3	4

[a] PTI means Proof Tracking Index, in accordance with IEC 60112:2003/AMD1:2009.

In the case of creepage distances to parts not energized or not intended to be earthed, where no tracking can occur, the values specified for material with PTI ≥ 600 apply for all materials (in spite of the real PTI).

For creepage distances subjected to working voltages of less than 60 s duration, the values specified for materials with PTI ≥ 600 apply for all materials.

For creepage distances not liable to contamination by dust or moisture, the values specified for material with PTI ≥ 600 apply (independent of the real PTI).

[b] Clearances between live parts and a non-live screw shell in an empty lampholder (unscrewed lamp) shall not be less than 2 mm.

[c] These values take account of possible unevenness of the mounting surface.

NOTE Values for creepage distances and clearances can be found for intermediate values of rated voltages by linear interpolation between tabulated values. No values are specified for rated voltages below 25 V as the voltage test of 15.4 is considered sufficient.

NOTE 3 Information on standard ratings for specific holder types is given in Clause 6.

Metal locking devices (see 10.3) for the coupling between outer shell and dome are considered as follows:

– if the locking device forms part of the centre contact, the clearances in item 1) of Table 13a or Table 13b apply;
– if the locking device forms part of the side contact(s), footnote b of Table 13a or Table 13b applies;
– if the locking device is a separate part, it shall only be taken into account in so far as it shortens any other required distance.

Table 14 – Minimum distances for non-sinusoidal pulse voltages

Rated pulse voltage (peak kV)	2	2,5	3	4	5	6	8
Minimum clearance (mm)	1	1,5	2	3	4	5,5	8

For distances subjected to both sinusoidal voltages and non-sinusoidal pulse voltages, the minimum required distance shall not be less than the highest value indicated in Tables 13a or 13b or 14.

IECNORM.COM : Click to view the full PDF of IEC 60238:2016 RLV

Creepage distances shall be not less than the required minimum clearance.

Minimum creepage distances and clearances between live parts of different polarity shall be reduced to 1 mm for lampholders E5 and to 2 mm (for PTI < 600) for lampholders E10 intended for series connected lamps (maximum rated voltage 25 V for lampholders E5 and 60 V for lampholders E10).

Compliance is checked by measuring with and without supply wires of the largest cross-sectional area according to 11.1 connected to the terminals.

18.2 Sealing compound shall not protrude above the edge of the cavity.

Compliance is checked by inspection.

19 Normal operation

Normal use shall cause no excessive wear or other harmful effect.

Insulation and protection against accidental contact shall not be seriously affected. Linings, barriers and the like shall have adequate mechanical strength and shall be reliably fixed.

Temperature rise and vibration to be expected in normal use shall not cause loosening of electrical connections.

Compliance is checked by the following test.

The specimen shall be placed in a test apparatus as shown in Figure 4. A corresponding test cap, according to Figure 5 shall be screwed in and out 100 times at a rate of about 15 times per minute.

The lampholder shall be fixed during half the number of operations by the threaded entry, dome or backplate according to the type of lampholder, and during the other half clamped at the outer shell.

The test cap (see Figures 13, 14 and 15) is screwed in with a torque of

- *0,4 Nm for candle lampholders E14;*
- *1 Nm for lampholders E14;*
- *1,5 Nm for lampholders E27;*
- *3 Nm for lampholders E40.*

At the end of the test, the specimen shall show

- *no wear impairing its operation;*
- *no damage impairing protection against electric shock;*
- *no loosening of electrical contacts;*
- *no loosening of the connection between shell and dome;*
- *no loosening of the set screw locking the threaded entry.*

Finally the specimen shall comply with the requirements of 9.2 and shall withstand an electric strength test according to 15.4, the test voltage being 500 V lower in each case.

NOTE The moisture treatment of Clause 15 is not repeated before this voltage test.

These requirements do not apply to lampholders E5 and E10.

IECNORM.COM : Click to view the full PDF of IEC 60238:2016 RLV

20 General resistance to heat

20.1 Lampholders shall be sufficiently resistant to heat.

Compliance is checked by the tests of 20.2 to 20.4.

20.2

– *For E27 lampholders:*

The lampholder is first checked by means of the gauges according to the current edition of standard sheets 7006-22C and 7006-22D of IEC 60061-3.

After these tests, a solid steel (preferably stainless steel) test cap complying with Figure 14 is screwed into the lampholder, mounted according to its intended use, with a torque of 1,5 Nm. The lampholder, with the test cap screwed in, is then placed in a vertical holder-up position (because the weight of the test cap shall not bear on the holder), in a heating cabinet having a temperature of approximately 85 °C.

This temperature is raised to 175 °C within 1 h ± 15 min. For lampholders which form an integral part of the luminaire, this temperature is replaced by that one measured according to the operating conditions given in 12.4.2 of IEC 60598-1, plus 10 K, with a tolerance of ±5 °C.

After reaching and maintaining this temperature, the lampholder is loaded for 48 h with a current equal to the rated current of the lampholder.

After this period, the lampholder is removed from the heating cabinet and allowed to cool down for 24 h without the test cap.

The tests with gauges 7006-22C and 7006-22D of IEC 60061-3 are then repeated.

The lampholder shall still comply with these gauges.

– *For E14 lampholders:*

A solid steel (preferably stainless steel) test cap B complying with Figure 13 is screwed into a candle lampholder E14, mounted according to its intended use, with a torque of 0,4 Nm and into all other lampholders E14 with a torque of 1 Nm. The lampholder, with test cap B screwed in, is then placed in a vertical holder-up position (because the weight of the test cap shall not bear on the holder), in a heating cabinet having a temperature of approximately 70 °C. This temperature is raised to 145 °C within 1 h ± 15 min. For lampholders which form an integral part of the luminaire, this temperature is replaced by that one measured according to the operating conditions given in 12.4.2 of IEC 60598-1, plus 10 K, with a tolerance of ±5 °C.

After reaching and maintaining this temperature, the lampholder is loaded for 48 h with a current equal to the rated current of the lampholder.

After this period, the lampholder is removed from the heating cabinet and allowed to cool down for 24 h without the test cap.

A solid brass cap A complying with Figure 13 is then screwed into the lampholder with the same torque and then unscrewed. This sequence of operations is performed 10 times, after which the contact resistance between the terminals of the lampholder is measured.

This measurement is made at the rated current of the lampholder, in an AC circuit of not more than 6 V; for switched lampholders the contact resistance in the switch is neglected. The measured contact resistance shall not exceed 0,02 Ω.

NOTE 1 Test cap A is carefully cleaned and polished before being screwed into the lampholder for the contact resistance measurement.

IECNORM.COM : Click to view the full PDF of IEC 60238:2016 RLV

– *For E27 and E14 lampholders:*

T-marked lampholders shall be tested at the marked temperature plus 10 °C.

Lampholders intended for use in refrigerators and food freezers shall be tested at the upper value of the rated operating temperature plus 10 °C.

NOTE 2 The value of 10 °C is being studied and is temporarily kept in line with the present requirements for E27 lampholders.

These requirements do not apply to lampholders E5, E10 and E40.

20.3 Contacts and all other current-carrying parts shall be so constructed as to prevent excessive temperature rise.

Compliance is checked by the following test which shall be made immediately after the test of 20.2 on the lampholder in whose terminals conductors of the maximum cross-sectional area according to 11.1 are fitted.

The terminal screws are tightened with a torque equal to two-thirds of the torque specified in 17.1; the lampholder is placed with the open end downwards and loaded for 1 h with 1,25 times its rated current.

The temperature rise of terminals shall not exceed 45 K.

This temperature is determined with the aid of melting particles or by thermocouples, not by means of thermometers.

For this test, a special test cap shown in Figure 11 is used.

After the test, it is verified that, as required in 11.4, the conductors are not damaged.

NOTE Pellets of beeswax (diameter 3 mm, melting temperature 65 °C) can be used as melting particles provided that the ambient temperature equals 20 °C.

These requirements do not apply to lampholders E5 and E10 with a rated voltage not exceeding 60 V.

20.4 The resistance to heat is then tested in a heating cabinet at the temperature indicated in Table 15.

Table 15 – Heating cabinet temperatures

Lampholder	Temperature °C
E10 general	75
E5 and E10 integral part of luminaire [a]	75 or measured temperature + 15 (whichever is the highest)
E14	170
E27	200
E40	260
[a] For E5, E10 and similar small lampholders which form an integral part with the luminaire such as Christmas tree lighting chains, the temperature is measured in the luminaire on the lamp cap at a distance of 2 mm from the lamp glass-to-cap junction.	

T-marked lampholders are tested at the marked temperature plus 35 K.

Lampholders intended for use in refrigerators and food freezers are tested:

a) at the rated minimum temperature, and

IECNORM.COM : Click to view the full PDF of IEC 60238:2016 RLV

b) at the rated operating temperature plus 35 K.

In case of a) the duration of the test shall be reduced to 16 h.

Immediately after this test, the lampholders shall once more be subjected to the test of 16.6.

A solid steel (preferably stainless steel) test cap complying with Figure 13 (test cap B), 14 or 15 is screwed fully home in the lampholder. The lampholder with the test cap screwed in is then placed in a vertical holder-up position (because the weight of the test cap shall not bear on the holder), in a heating cabinet having approximately half the temperature specified in Table 15. This temperature is raised to the required test temperature within 1 h ± 15 min. Following this, the test is continued for 168 h without interruption.

The test temperature is maintained with a tolerance of ±5 K.

During the test, the lampholder shall not undergo any change impairing its further use especially in the following respects:

- *reduction of the protection against electric shock;*
- *loosening of electrical contacts;*
- *cracks, swelling or shrinking;*
- *sealing compound flowing out.*

The test cap is removed from the lampholder after cooling down to approximate room temperature.

At the end of the test, it is checked if the Edison threads are not deformed. The test is made by means of the "Go" gauges shown in the current edition of standard sheets 7006-25 or 7006-25A of IEC 60061-3, as appropriate.

In addition, the holder shall withstand the mechanical strength tests made under the conditions specified in 16.2 and 16.6, the torque, however, being reduced to 50 % of the original value and the height of fall being reduced to 5 cm, respectively.

Sealing compound shall not flow to such an extent that live parts are exposed; a mere displacement of the compound is neglected.

This test is not made on integral lampholders.

21 Resistance to heat, fire and tracking

21.1 Parts retaining the contacts and external parts of lampholders of insulating material and of lampholders comprising external parts of insulating material with a conductive outer surface shall be resistant to heat.

For material other than ceramic, compliance is checked with the aid of the ball-pressure test by means of the apparatus shown in Figure 10.

All the tests required by Clause 21 of this standard are not performed on lampholders which are integral with a luminaire, as similar tests are required in Clause 13 of IEC 60598-1. However, the operating conditions of these tests will take into account those specific to lampholders and defined in Clause 21 of this standard.

For lampholders E5 and E10, only the parts retaining the contacts are subjected to the ball-pressure test.

IECNORM.COM : Click to view the full PDF of IEC 60238:2016 RLV

The surface of the part under test is placed in the horizontal position and a steel ball of 5 mm diameter is pressed against this surface with a force of 20 N.

The test is made in a heating cabinet at a temperature shown in 20.4, except for lampholders E5 and E10, where the temperature is 125 °C.

The test load and the supporting means are placed in the heating cabinet for a sufficient time to ensure that they have attained the stabilized testing temperature before the test commences.

The part to be tested is placed in the heating cabinet for a period of 1 h, before the test load is applied.

If the surface under test bends, the part where the ball presses is supported. For this purpose, if the test cannot be made on the complete specimen, a suitable part may be cut from it.

The specimen shall be at least 2,5 mm thick, but if such a thickness is not available on the specimen then two or more pieces are placed together.

After 1 h, the ball is removed from the specimen which is then immersed within 10 s in cold water for cooling down to approximately room temperature. The diameter of the impression caused by the ball is measured and shall not exceed 2 mm.

NOTE In the event of curved surfaces, such as lampholder shells, the shorter axis is measured if the indent is elliptical.

In case of doubt, the depth of the impression is measured and the diameter ø calculated using the formula: $ø = 2\sqrt{p(5-p)}$, where p is the depth of impression.

21.2 External parts of insulating material (outer shell, screw shell, dome or backplate) providing protection against electric shock, and parts of insulating material (terminal/contact assembly) retaining live parts or extra-low voltage (ELV) parts in position, shall be resistant to flame and ignition.

For materials other than ceramic, compliance is checked by the test of 21.3 or 21.4.

Screw shells which are only live when a lamp is inserted into the lampholder are not deemed to be live parts for the purpose of this requirement.

Insulating material retaining such shells in place is therefore checked by the test of 21.3.

21.3 External parts of insulating material, including those with a conductive exterior, providing protection against electric shock, and parts of insulating material retaining ELV parts in position, are subjected to the glow-wire test in accordance with IEC 60695-2-11:2014, subject to the following details.

– *The specimen is a complete holder. It may be necessary to take away parts of the holder to perform the test, but care should be taken to ensure that the test conditions are not significantly different from those occurring in normal use.*
– *The specimen is mounted on the carriage and pressed against the glow-wire tip with a force of 1 N, preferably 15 mm or more from the upper edge, into the centre of the surface to be tested. The penetration of the glow-wire into the specimen is mechanically limited to 7 mm.*

If it is not possible to make the test on a specimen as described above because the specimen is too small, the above test is made on a separate specimen of the same material, 30 mm × 30 mm square and with a thickness equal to the smallest thickness of the specimen.

IECNORM.COM : Click to view the full PDF of IEC 60238:2016 RLV

– *The temperature of the tip of the glow-wire is 650 °C.*

After 30 s the specimen is withdrawn from contact with the glow-wire tip. The glow-wire temperature and heating current are constant for 1 min prior to commencing the test. Care should be taken to ensure that heat radiation does not influence the specimen during this period. The glow-wire tip temperature is measured by means of a sheathed fine wire thermocouple constructed and calibrated as described in IEC 60695-2-11:2014.

– *Any flame or glowing of the specimen shall extinguish within 30 s of withdrawing the glow-wire and any flaming drops of the material shall not ignite a piece of tissue paper, as specified in definition 4.187 of ISO 4046-4:2002, spread out horizontally 200 mm ± 5 mm below the specimen.*

21.4 Parts of insulating material retaining live parts or ELV lamp contacts in position are subjected to the needle-flame test in accordance with IEC 60695-11-5, subject to the following details.

– *The specimen is a complete lampholder. It may be necessary to take away parts of the lampholder to perform the test (for example contacts, which would otherwise shield the area to be tested), but care should be taken to ensure that the test conditions are not significantly different from those occurring in normal use.*
– *The test flame is applied to the centre of the surface to be tested.*
– *The duration of application is 10 s.*
– *Any self-sustaining flame shall extinguish within 30 s of removal of the gas flame and any flaming drops of the material shall not ignite a piece of tissue paper, spread out horizontally 200 mm ± 5 mm below the specimen.*

NOTE For additional information see the explanatory sheet, Figure 18.

21.5 For drip-proof lampholders, insulating parts retaining live parts or ELV parts in position shall have adequate resistance to tracking.

For materials other than ceramic, compliance shall be checked by the proof tracking test in accordance with IEC 60112:2003/AMD1:2009, subject to the following details.

– *If the specimen has no flat surface of at least 15 mm × 15 mm, the test may be carried out on a flat surface with reduced dimensions provided drops of liquid do not flow off the specimen during the test.*

  No artificial means should, however, be used to retain the liquid on the surface. In case of doubt, the test may be made on a separate strip of the same material, having the required dimensions and manufactured by the same process.
– *If the thickness of the specimen is less than 3 mm, two specimens, or more if necessary, should be stacked to obtain a thickness of at least 3 mm.*
– *The test shall be made at three places of the specimen or on three specimens.*
– *The electrodes shall be of platinum, and test solution A specified in 7.3 of IEC 60112:2003/AMD1:2009 shall be used.*
– *For drip-proof lampholders the specimen shall withstand 50 drops without failure at a test voltage of PTI 175.*
– *A failure has occurred if a current of 0,5 A or more flows for at least 2 s in a conducting path between the electrodes on the surface of the specimen, thus operating the overcurrent relay, or if the specimen burns without releasing the overcurrent relay.*
– *Clause 9 of IEC 60112:2003/AMD1:2009 regarding determination of erosion, does not apply.*

IECNORM.COM : Click to view the full PDF of IEC 60238:2016 RLV

22 Resistance to excessive residual stresses (season cracking) and to rusting

22.1 Contacts and other parts of rolled sheets of copper or copper alloy whose failure might cause the lampholder to become unsafe shall not be damaged due to excessive residual stresses.

Compliance is checked by the following test.

The surface of the specimens is carefully cleaned, varnish being removed by acetone, and grease and finger prints by petroleum spirit or the like.

The specimens are placed for 24 h in a test cabinet, the bottom of which is covered by an ammonium chloride solution having a pH value of 10 (for details of the test cabinet, the test solution and the test procedure, see Annex A).

After this treatment, the specimens are washed in running water; 24 h later they shall show no cracks when inspected at an optical magnification of 8×.

Cracks which may occur in very restricted areas of the outer shell of metal lampholders near the fixing areas of the insulating ring shall not be considered.

In order not to influence the results of the test, the specimens should be handled with care.

22.2 Ferrous parts, the rusting of which may endanger the safety of the lampholder, shall be adequately rust protected.

Compliance is checked by the following test.

All grease is removed from parts to be tested by immersion in a suitable degreasing agent for 10 min. The parts are then immersed for 10 min in a water solution of 10 % ammonium chloride at a temperature of 20 °C ± 5 °C.

Without drying, but after shaking off drops of water, the parts are placed for 10 min in a box containing air saturated with moisture at a temperature of 20 °C ± 5 °C.

After the parts have been dried for 10 min in a heating cabinet at a temperature of 100 °C ± 5 °C, any traces of rust on sharp edges and any yellowish film may be removed by rubbing, after which their surface shall show no signs of rust.

For small helical springs and the like, and for ferrous parts exposed to abrasion, a layer of grease is deemed to provide sufficient rust protection.

Such parts are not subjected to the test.

IECNORM.COM : Click to view the full PDF of IEC 60238:2016 RLV

h = 0,866 03 s
h/4 = 0,216 51 s
h/8 = 0,108 25 s
t0 = 5/8h = 0,541 27 s

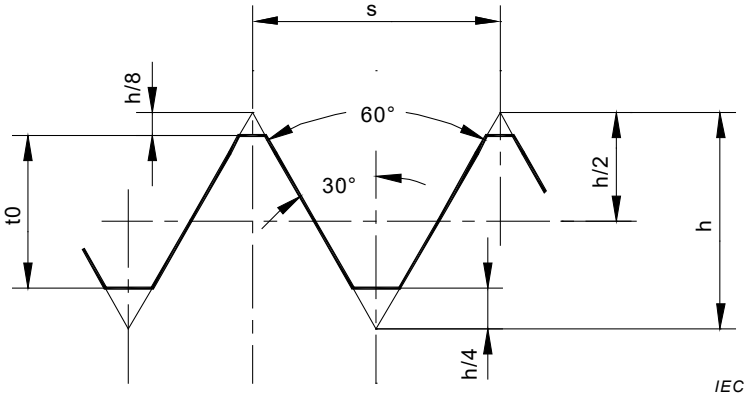

Basic profile [a]

Design profile for the nut

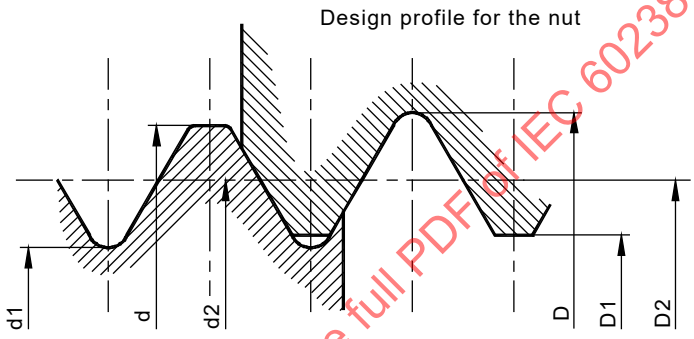

Design profile for the screw

IEC

Dimensions in millimetres

Designation	s	Screw					Nut				
		d		d2		d1	D	D2		D1	
		Max.	Min.	Max.	Min.	Max.	Min.	Max.	Min.	Max.	Min.
M8×1	1	8,000	7,800	7,350	7,238	6,917	8,000	7,462	7,350	7,117	6,917
M10×1	1	10,000	9,800	9,350	9,238	8,917	10,000	9,462	9,350	9,117	8,917
M13×1	1	13,000	12,800	12,350	12,190	11,917	13,000	12,510	12,350	12,117	11,917
M16×1	1	16,000	15,800	15,350	15,190	14,917	16,000	15,510	15,350	15,117	14,917

[a] The basic profile is the profile to which the deviations defining the limits of the external and the internal threads are applied.

Figure 1a –Nipple thread for lampholders: metric thread. Basic profile and design profile for the nut and for the screw

IECNORM.COM : Click to view the full PDF of IEC 60238:2016 RLV

h = 0,960 491 s
h/6 = 0,160 082 s
t0 = 2/3h = 0,640 327 s
r = 0,137 329 s

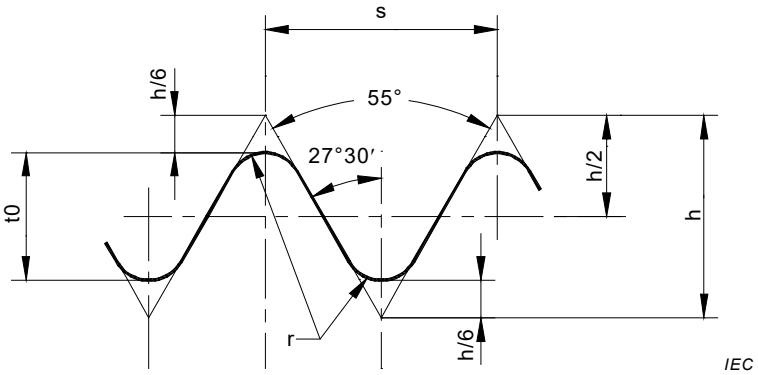

Basic profile [a]

Design profile for the nut

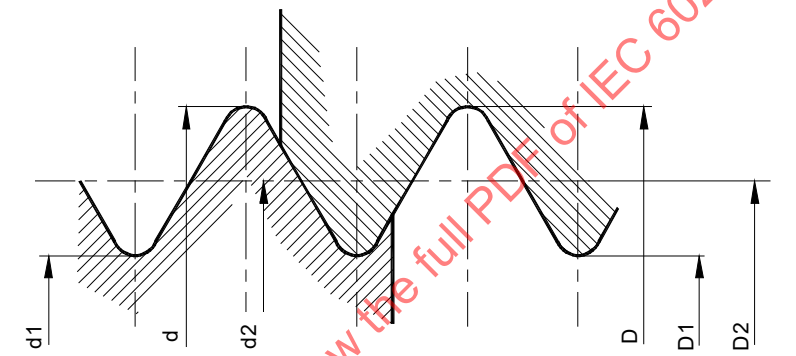

Design profile for the screw

Dimensions in millimetres

Designation	n[a]	Screw					Nut				
		d		d2		d1	D	D2		D1	
		Max.	Min.	Max.	Min.	Max.	Min.	Max.	Min.	Max.	Min.
G3/8A	19	16,662	16,412	15,806	15,681	14,950	16,662	15,931	15,806	15,395	14,50

[a] Number of threads per inch.

[a] The basic profile is the profile to which the deviations defining the limits of the external and the internal threads are applied.

Figure 1b –Nipple thread for lampholders: ISO standard pipe thread. Basic profile and design profile for the nut and for the screw

IECNORM.COM : Click to view the full PDF of IEC 60238:2016 RLV

Gauges for the screw

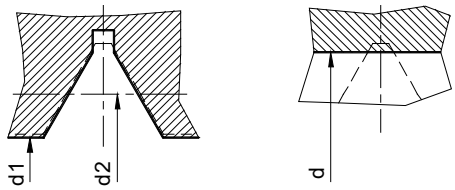

– – – Basic profile (see Figure 1a)

"Go" gauge

"Not Go" gauge

IEC

Dimensions in millimetres

Designation	s	d		d2		d1		Wear
		Value	Tolerance	Value	Tolerance	Value	Tolerance	
M10×1	1	9,800	+0,004 –0,004	9,350	–0,012 –0,020	8,917	+0,004 –0,004	0,012
M13×1	1	12,800	+0,004 –0,004	12,350	–0,012 –0,020	11,917	+0,004 –0,004	0,012
M16×1	1	15,800	+0,004 –0,004	15,350	–0,012 –0,020	14,917	+0,004 –0,004	0,012
NOTE The tolerances in column d2 are deliberately positioned both on the same side of the dimension to safeguard a no-man's-land.								

Gauges for the nut

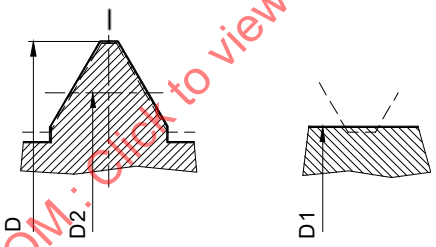

– – – Basic profile (see Figure 1a)

"Go" gauge

"Not Go" gauge

IEC

Dimensions in millimetres

Designation	s	D		D2		D1		Wear
		Value	Tolerance	Value	Tolerance	Value	Tolerance	
M10×1	1	10,000	+0,004 –0,004	9,350	+0,012 +0,020	9,117	+0,004 –0,004	0,012
M13×1	1	13,000	+0,004 –0,004	12,350	+0,012 +0,020	12,117	+0,004 –0,004	0,012
M16×1	1	16,000	+0,004 –0,004	15,350	+0,012 +0,020	15,117	+0,004 –0,004	0,012
NOTE The tolerances in column D2 are deliberately positioned both on the same side of the dimension to safeguard a no-man's-land.								

Figure 2a – Gauges for metric thread for nipples

IECNORM.COM : Click to view the full PDF of IEC 60238:2016 RLV

Gauges for the screw

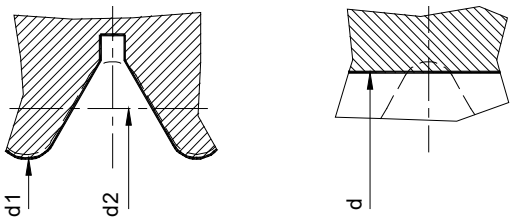

— — — Basic profile (see Figure 1b)

"Go" gauge

"Not Go" gauge

IEC

Dimensions in millimetres

Designation	n[a]	d		d2		d1		Wear
		Value	Tolerance	Value	Tolerance	Value	Tolerance	
G3/8A	19	16,412	+0 –0,008	15,806	+0 –0,020	14,950	+0 –0,018	–

[a] Number of threads per inch.

Gauges for the nut

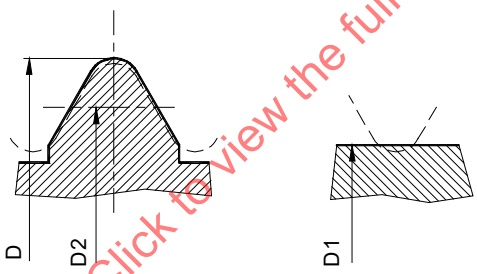

— — — Basic profile (see Figure 1b)

"Go" gauge

"Not Go" gauge

IEC

Dimensions in millimetres

Designation	n[a]	D		D2		D1		Wear
		Value	Tolerance	Value	Tolerance	Value	Tolerance	
G3/8A	19	16,662	+0,018 –0,005	15,806	+0,005 +0,028	15,395	+0,008 –0	0,005

[a] Number of threads per inch.

Figure 2b – Gauges for ISO standard pipe thread for nipples

IECNORM.COM : Click to view the full PDF of IEC 60238:2016 RLV

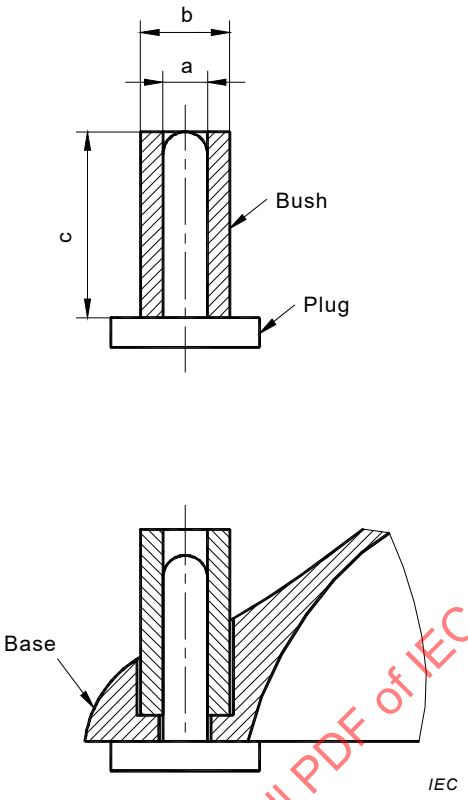

Dimensions in millimetres

Reference	Dimension	Tolerance	
		Manufacture	Wear
a	4,1	+0,03 –0,0	+0,0 –0,03
b	8,2	+0,03 –0,0	+0,0 –0,03
c	18	+0,1 –0,1	– –

Figure 3 – Gauge for holes for backplate lampholder screws

IECNORM.COM : Click to view the full PDF of IEC 60238:2016 RLV

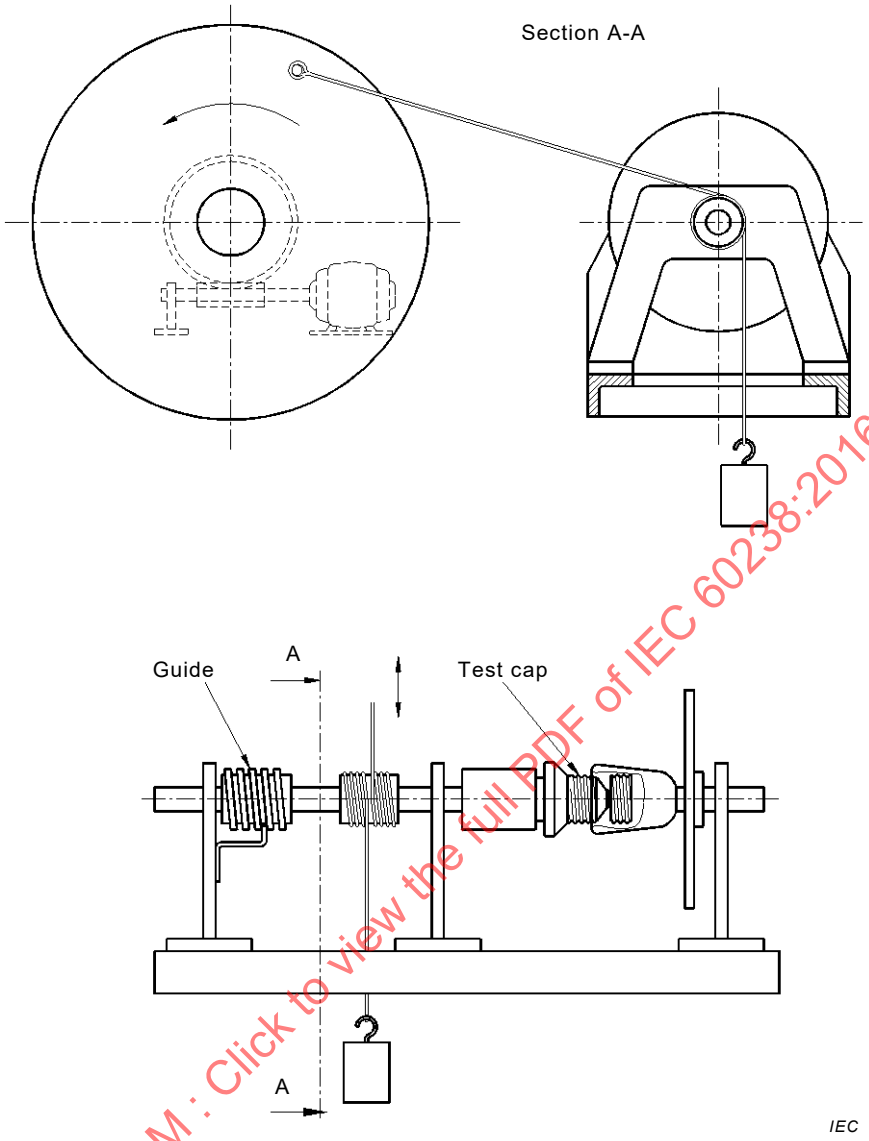

Figure 4 – Normal operation test apparatus

IECNORM.COM : Click to view the full PDF of IEC 60238:2016 RLV

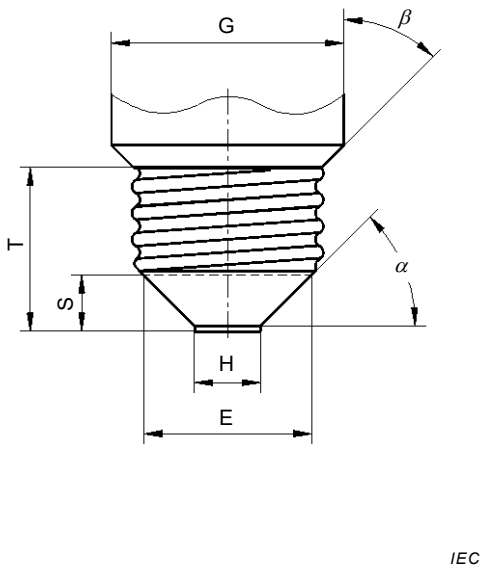

Figure 5a – Test cap E14/E27

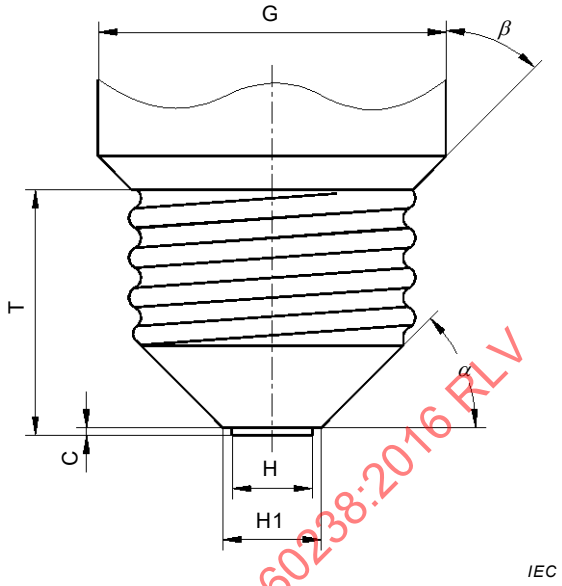

Figure 5b – Test cap E40

Material: Hardened steel

The dimensions of the thread on the test cap shall be between the maximum and minimum values specified for E14, E27 and E40 caps in standard sheets 7004-23, 7004-21 and 7004-24 of IEC 60061-1, respectively.

Dimensions in millimetres

Lampholder	C	E	G	H	H1	S	T	α	β
E14 E27 E40	– – 0,5	12 23 –	17 32 50	4,8 9,5 14	– – 17	4 7,7 –	17 23 35	45° 45° 45°	45° 45° 45°
Tolerance	+0,1 –0,1	– –	+0,5 –0,5	+0,1 –0,1	+0,1 –0	+0,1 –0	+0,1 –0,1	+30′ –30′	+1° –1°

Figure 5 – Test caps for the test of Clause 18

IECNORM.COM : Click to view the full PDF of IEC 60238:2016 RLV

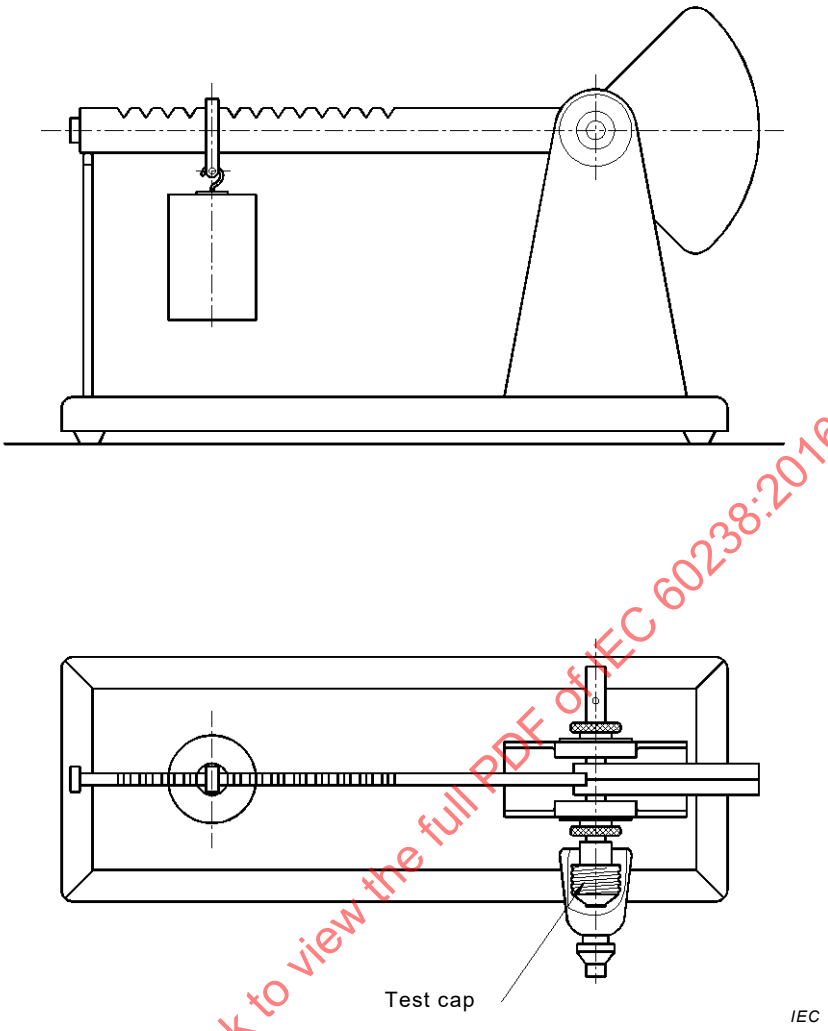

Figure 6 – Torque apparatus

IECNORM.COM : Click to view the full PDF of IEC 60238:2016 RLV

Dimensions in millimetres (unless otherwise indicated)

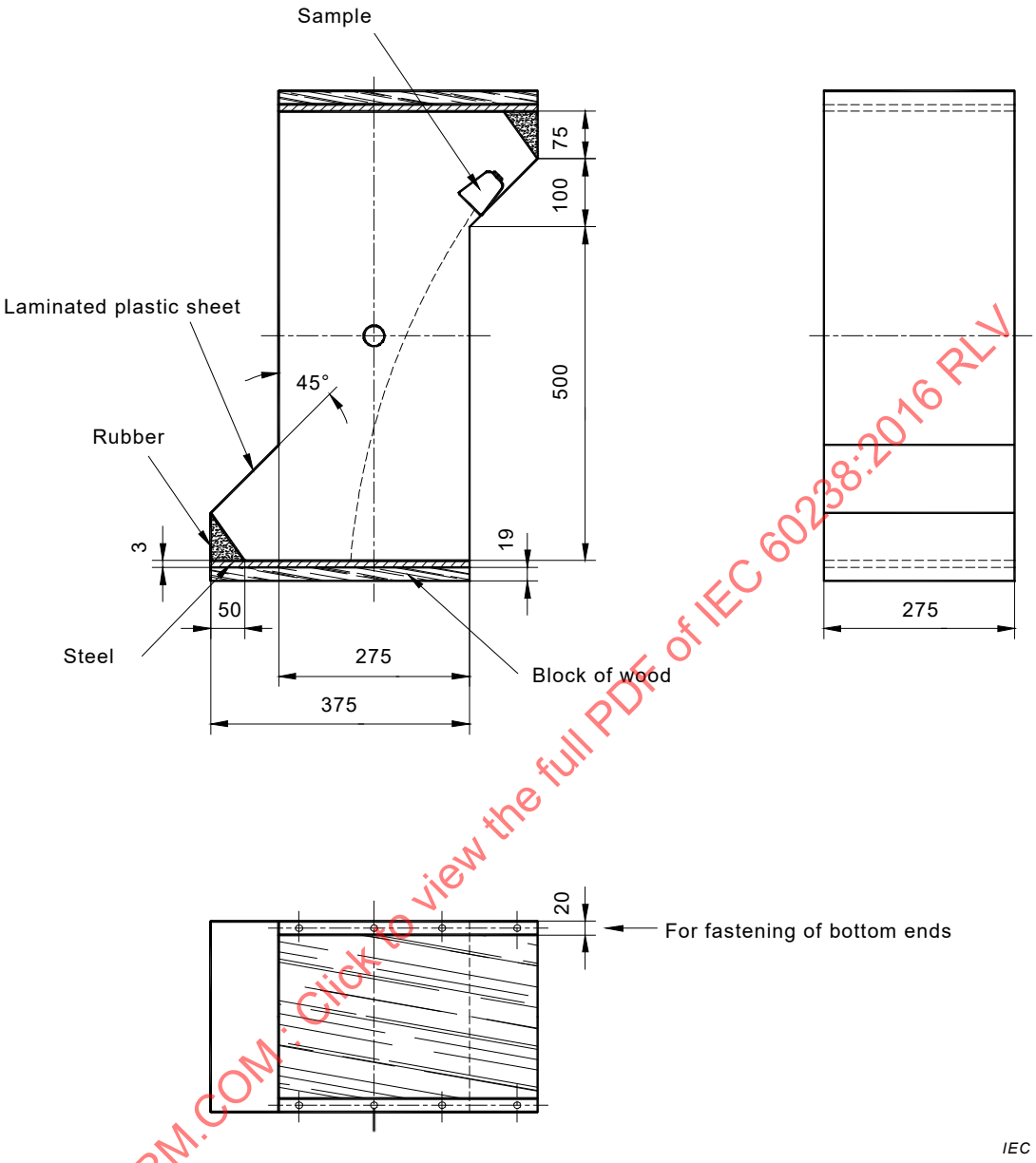

The body of the tumbling barrel shall be made of steel sheet of 1,5 mm thickness.

The compartments where the sample rests between individual falls shall be backed by a rubber part made of chip-resistant rubber with a hardness of 80 IRHD and the sliding surfaces of these parts shall be made of laminated plastic sheet[3].

The tumbling barrel shall be provided with an aperture with lid made of transparent acrylic.

The shaft of the tumbling barrel shall not protrude into the barrel itself.

Figure 7 – Tumbling barrel

[3] Formica® is an example of a suitable product available commercially. This information is given for the convenience of users of this document and does not constitute an endorsement by IEC of this product.

IECNORM.COM : Click to view the full PDF of IEC 60238:2016 RLV

Dimensions in millimetres

NOTE For information, this drawing has been retained in this standard, although there is a basic standard.

In case of doubt regarding the drawing, refer to IEC 60068-2-75.

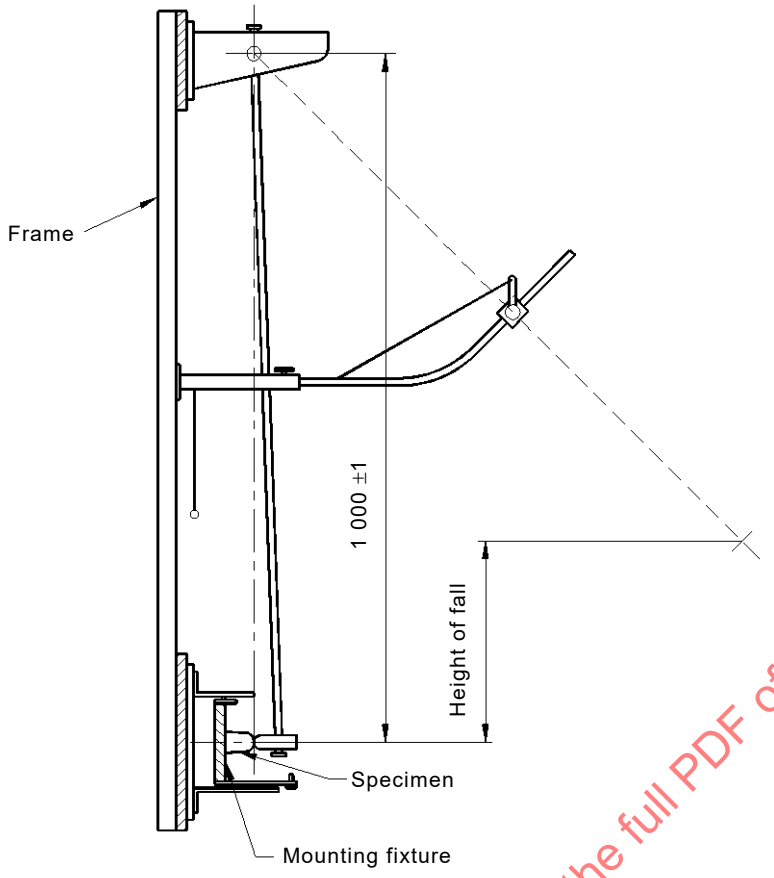

Figure 8a – Impact-test apparatus

Dimensions in millimetres (unless otherwise indicated)

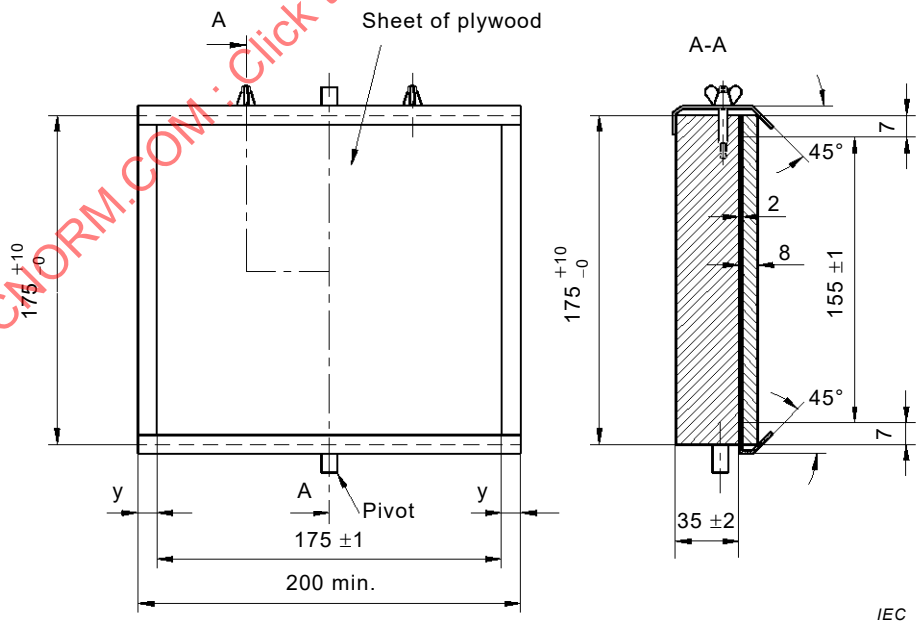

NOTE For information this drawing has been retained in this standard, although there is a basic standard. In case of doubt regarding the drawing, refer to IEC 60068-2-75.

Figure 8b – Mounting support

Figure 8 – Impact-test apparatus

IECNORM.COM : Click to view the full PDF of IEC 60238:2016 RLV

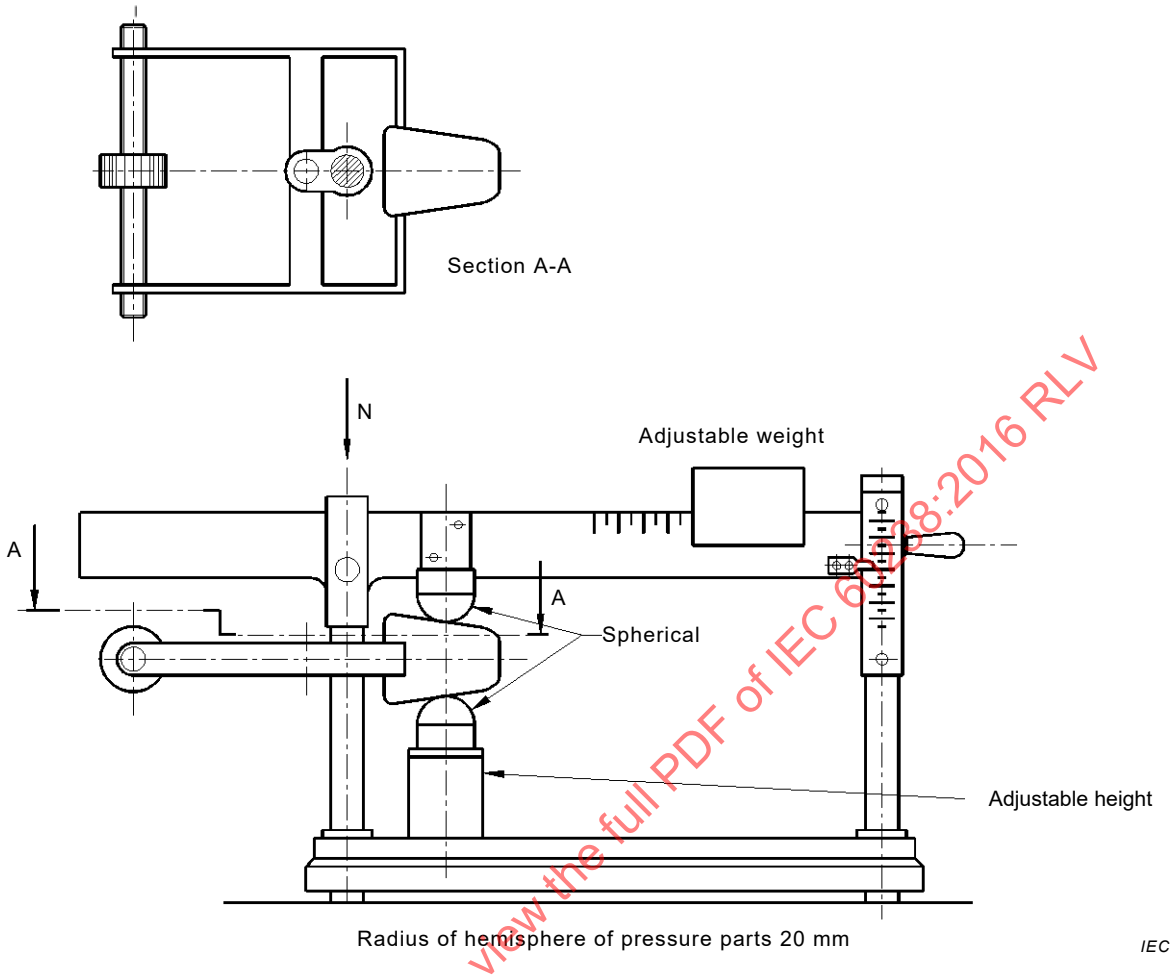

Figure 9 – Pressure apparatus

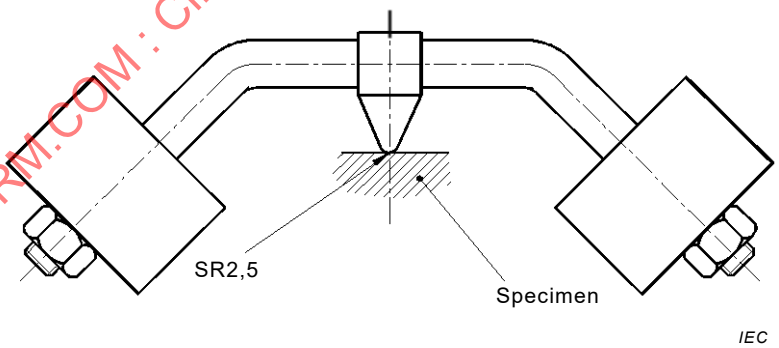

Figure 10 – Ball-pressure test apparatus

IECNORM.COM : Click to view the full PDF of IEC 60238:2016 RLV

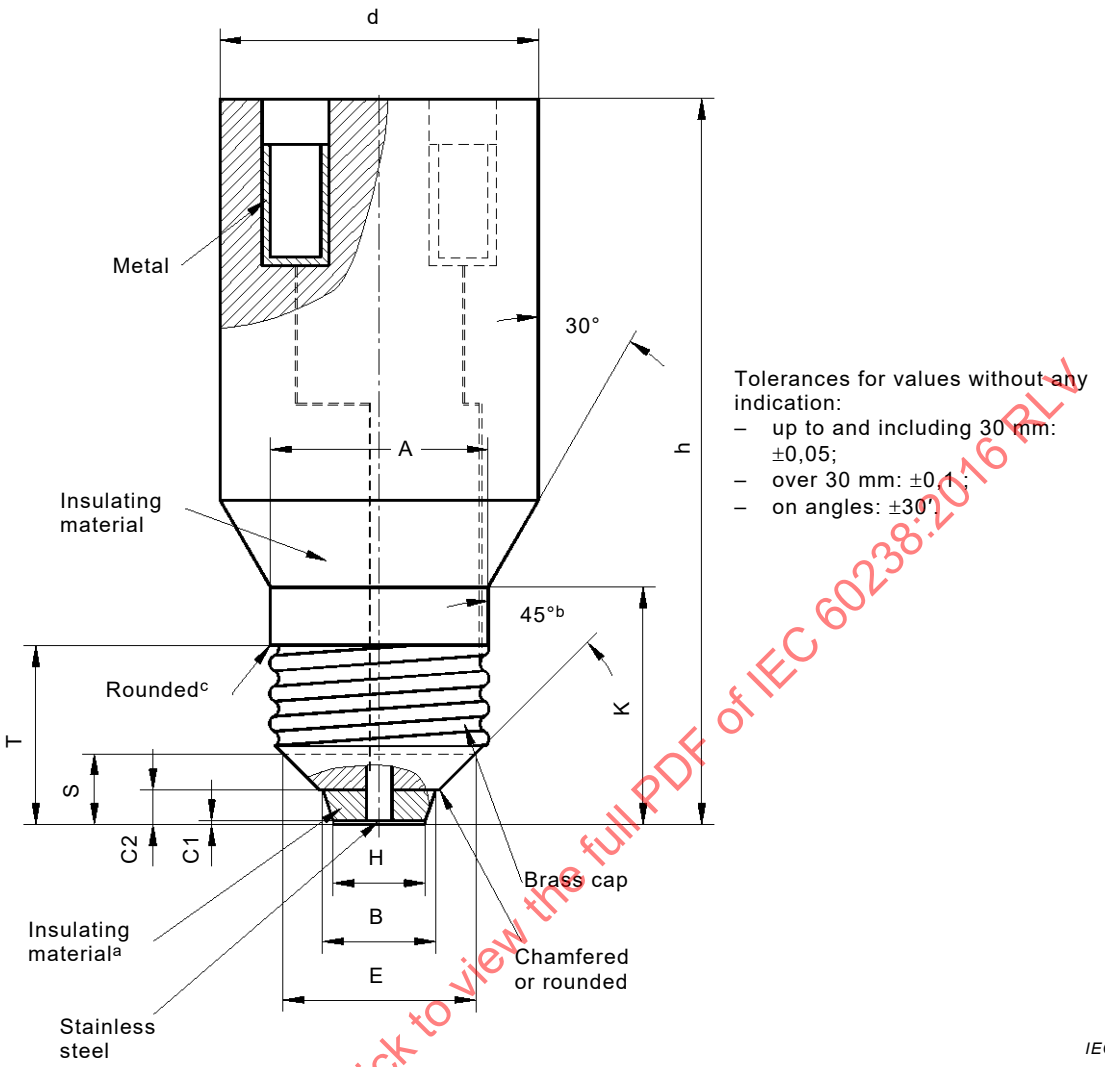

a The insulating material shall be such that it is dimensionally stable, easy to shape and having a PTI of 600; PTFE, for example, is a suitable material.

b Refers to the metal part only; not applicable to test cap E10.
The dimensions of the thread on the test cap shall be between the maximum and minimum values specified for E10, E14, E27 and E40 caps in standard sheets 7004-22, 7004-23, 7004-21 and 7004-24 of IEC 60061-1, respectively. The inner diameter of the brass cap shall be 2 mm less than the dimension d1 indicated on the relevant standard sheet. The cross-sectional area of the conductors shall be 0,75, 1,5, 1,5 and 4,0 mm^2 for E10, E14, E27 and E40, respectively. The conductors shall be rigid (solid or stranded).

c For the E14 test cap, a 45° chamfer is required on the cylindrical portion of the gauge.

NOTE Values for E5 lampholders are under consideration.

Dimensions in millimetres

Lampholder	d	h	B	C1	C2	H	S	E	T min.	K min.	A max.
E10	18	60	6	0,5	2,5	4	–	–	9,5	19	13
E14	38	80	9,5	0,5	3,8	6,2	4,5	12	16	27,2	17,1
E27	38	80	13,5	0,5	4,2	11,5	8,5	23	21,5	28,3	26,1
E40	55	100	25	1	8	18	10[a]	34[a]	34	47,8	39

a In case of lampholders E40, dimensions S and E are only needed for the design of the gauges.

Figure 11 – Test cap for the tests of 15.4 and 20.3

IECNORM.COM : Click to view the full PDF of IEC 60238:2016 RLV

Dimensions in millimetres

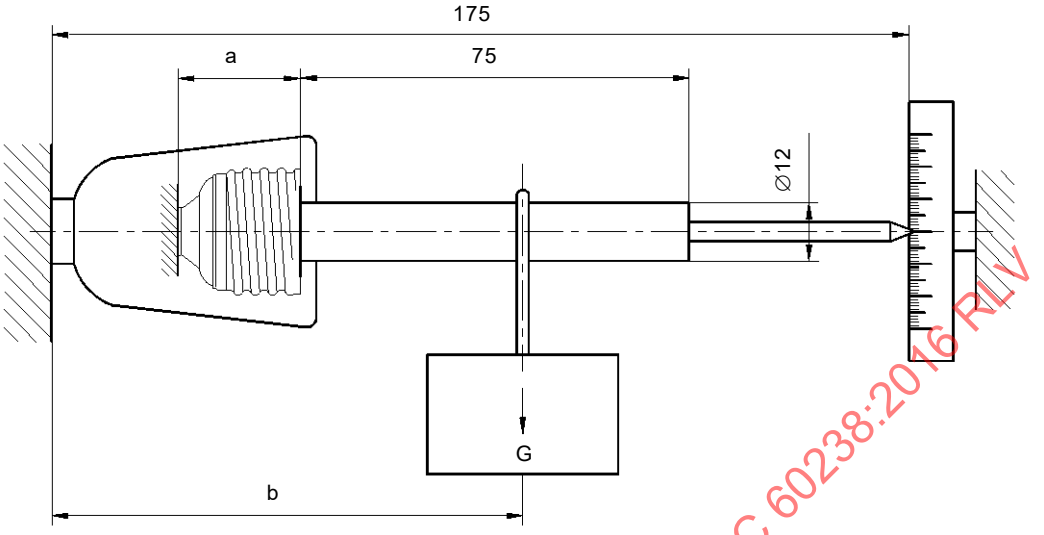

Lampholder	a	b	G kg
E14 E27 E40	19 25 37	100 100 140	1 2 3

Figure 12 – Bending apparatus

IECNORM.COM : Click to view the full PDF of IEC 60238:2016 RLV

Dimensions in millimetres (unless otherwise indicated)

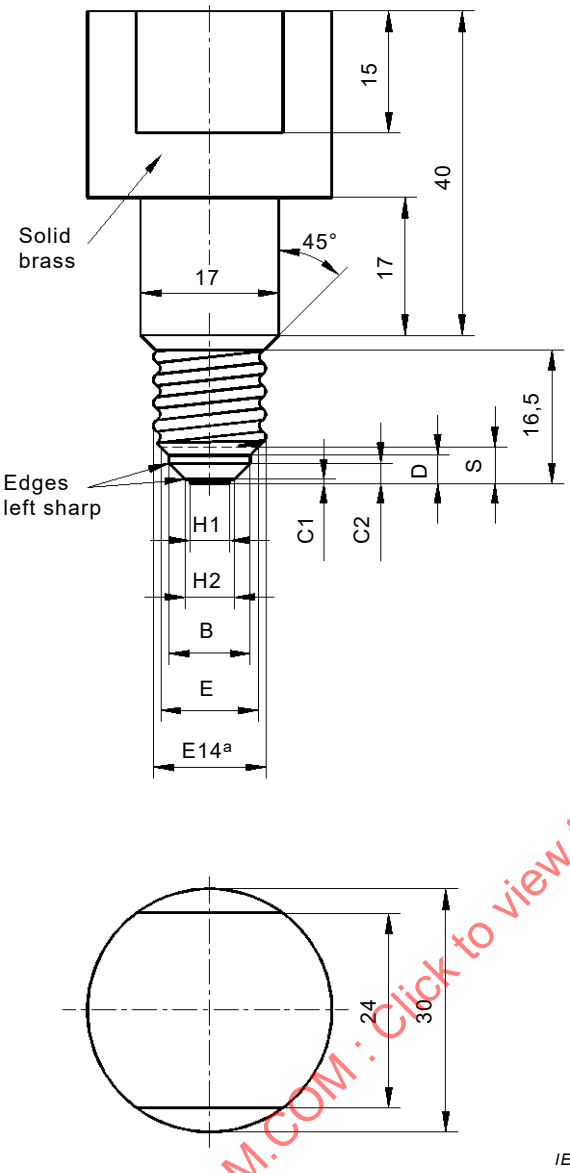

Figure 13a – Test cap A

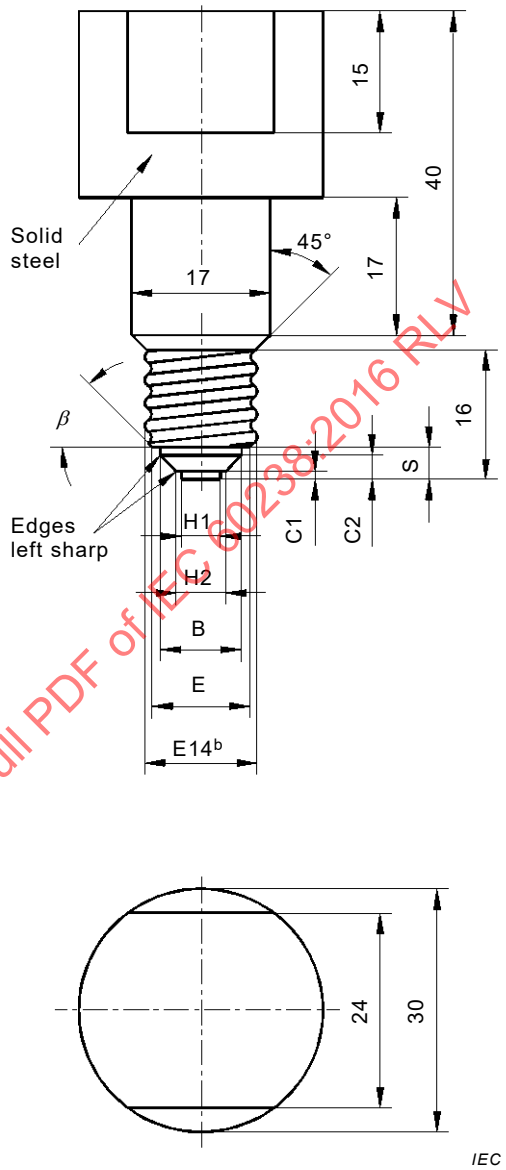

Figure 13b – Test cap B

[a] The dimensions of the thread on test cap A shall be between the maximum and minimum values specified in standard sheet 7004-23 of IEC 60061-1.

[b] The dimensions of the thread on test cap B shall be the minimum values, with a tolerance of ±0,05 mm, specified in standard sheet 7004-23 of IEC 60061-1.

Figure 13 *(1 of 2)*

IECNORM.COM : Click to view the full PDF of IEC 60238:2016 RLV

Dimensions in millimetres (unless otherwise indicated)

Reference	Dimensions		Tolerances	
	Test cap A	Test cap B	Test cap A	Test cap B
C1	0,5	1,0	+0,0 –0,1	+0,0 –0,1
C2	2,5	3,0	+0,0 –0,1	+0,0 –0,1
D	3,5	–	+0,1 –0,0	–
S	4,5	4,0	+0,06 –0,0	+0,0 –0,06
H1	4,8	4,8	+0,04 –0,04	+0,04 –0,04
H2	6	6	+0,04 –0,04	+0,04 –0,04
B	10	10	+0,04 –0,0	+0,06 –0,0
E	12	12	–	–
β	–	45°	–	+10′ –10′

Figure 13 – Test cap A and test cap B for lampholders E14 *(2 of 2)*

IECNORM.COM : Click to view the full PDF of IEC 60238:2016 RLV

Dimensions in millimetres (unless otherwise indicated)

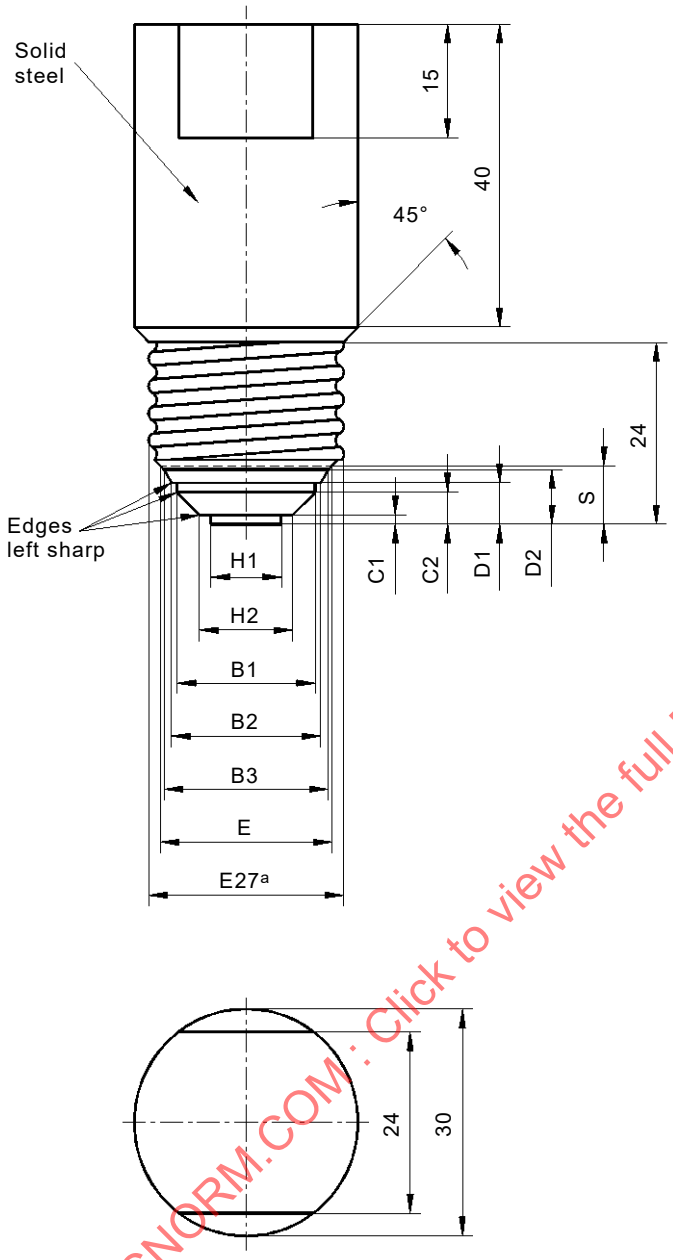

Reference	Dimension	Tolerance
C1	1,2	+0,0 −0,04
C2	4,2	+0,0 −0,06
D1	5,45	+0,1 −0,0
D2	7,2	+0,1 −0,0
S	7,7	+0,0 −0,04
H1	9,5	+0,04 −0,04
H2	12,5	+0,04 −0,04
B1	18,5	+0,06 −0,0
B2	20	+0,06 −0,0
B3	22	+0,06 −0,0
E	23	–

IECNORM.COM : Click to view the full PDF of IEC 60238:2016 RLV

[a] The dimensions of the thread on the test cap shall be the minimum values, with a tolerance of ±0,05 mm, specified in standard sheet 7004-21 of IEC 60061-1.

Figure 14 – Test cap for lampholders E27

Dimensions in millimetres (unless otherwise indicated)

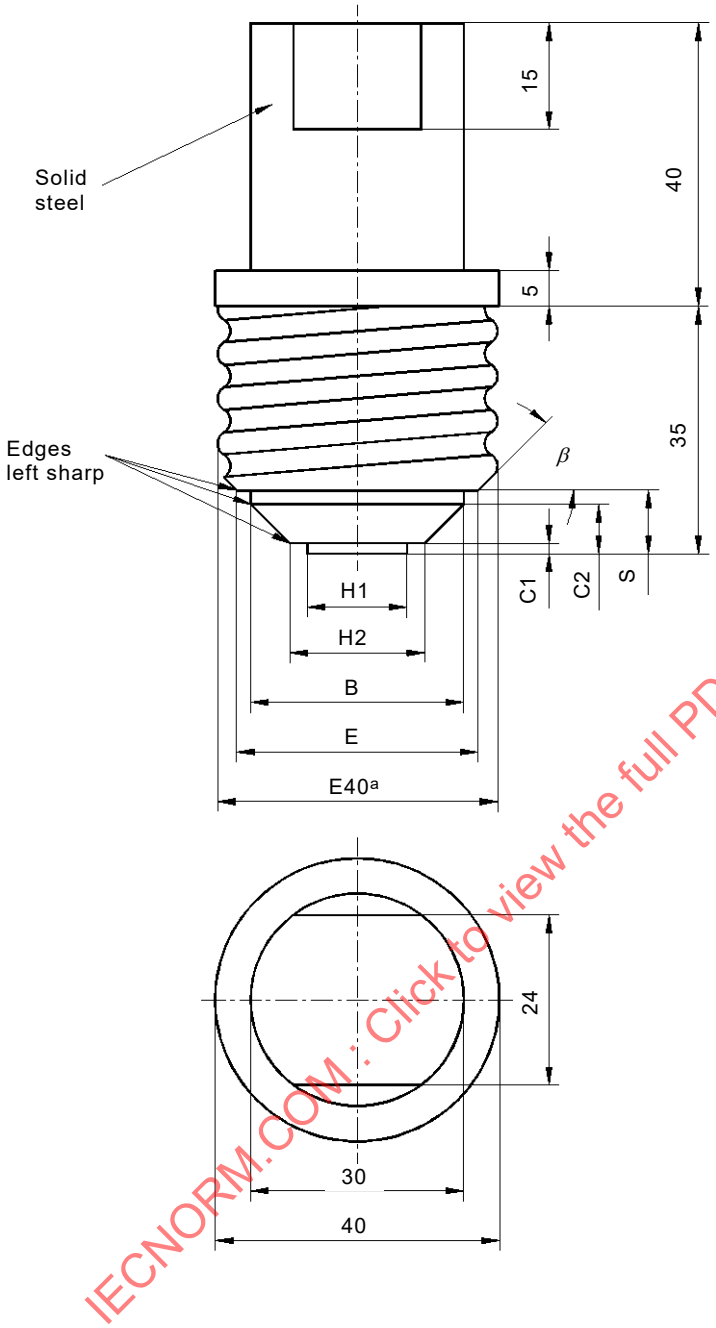

Reference	Dimension	Tolerance
C1	1,5	+0,0 −0,1
C2	7	+0,0 −0,1
S	9	+0,0 −0,06
H1	14	+0,04 −0,04
H2	19	+0,04 −0,04
B	30	+0,06 −0,0
E[a]	34	–
β	45°	+10′ −10′

[a] The dimensions of the thread on the test cap shall be the minimum values, with a tolerance of ±0,05 mm, specified in standard sheet 7004-24 of IEC 60061-1.

Figure 15 – Test cap for lampholders E40

IECNORM.COM : Click to view the full PDF of IEC 60238:2016 RLV

Linear dimensions in millimetres

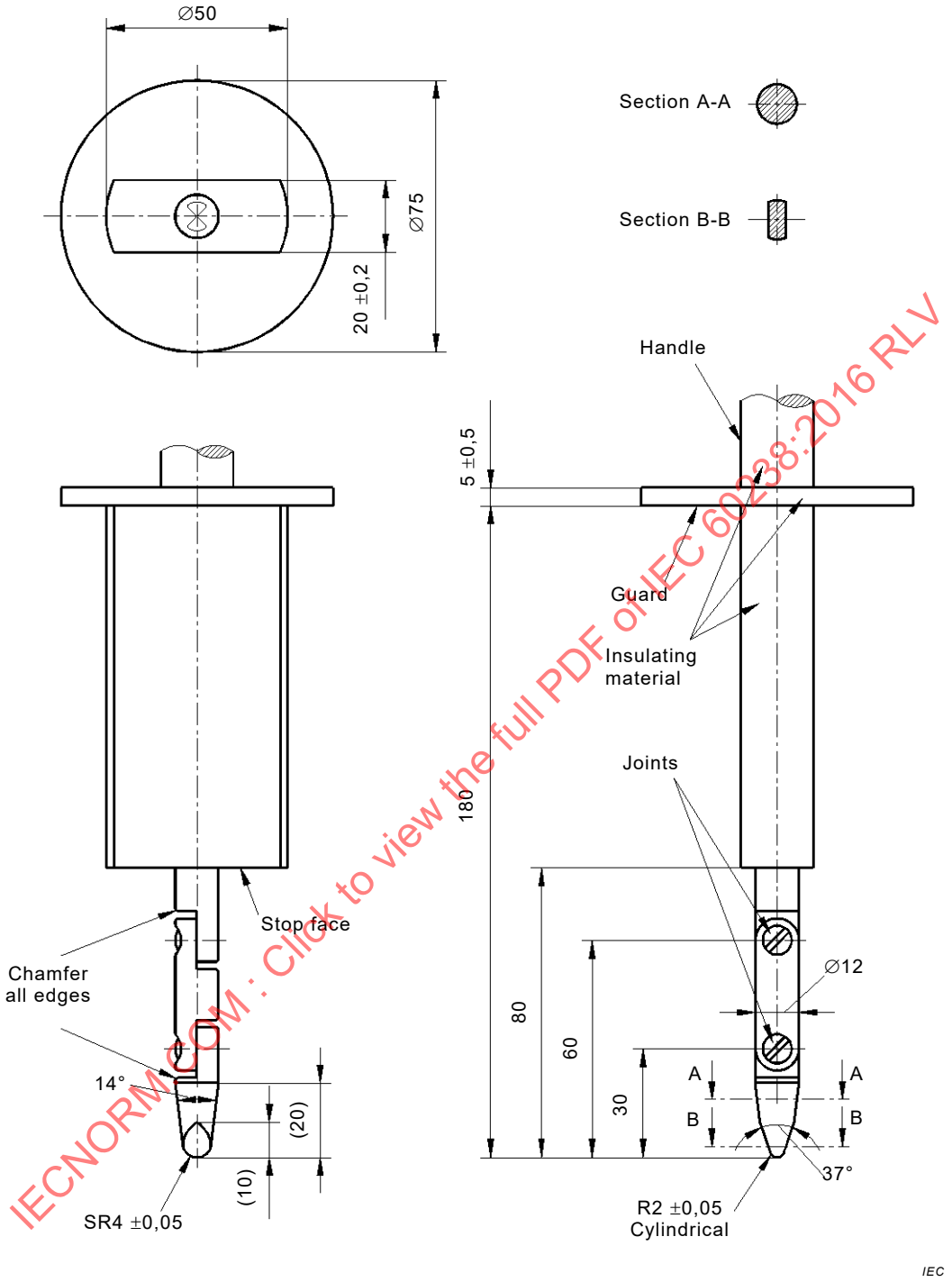

IECNORM.COM : Click to view the full PDF of IEC 60238:2016 RLV

Material: metal, except where otherwise specified.

Tolerances on dimensions without specific tolerance:

on angles: 0′/–10′
on linear dimensions:
- up to 25 mm: 0/–0,05 mm
- over 25 mm: ±0,2 mm

Both joints shall permit movement in the same plane and the same direction through an angle of 90° with a 0° to +10° tolerance.

Figure 16 – Standard test finger (according to IEC 60529)

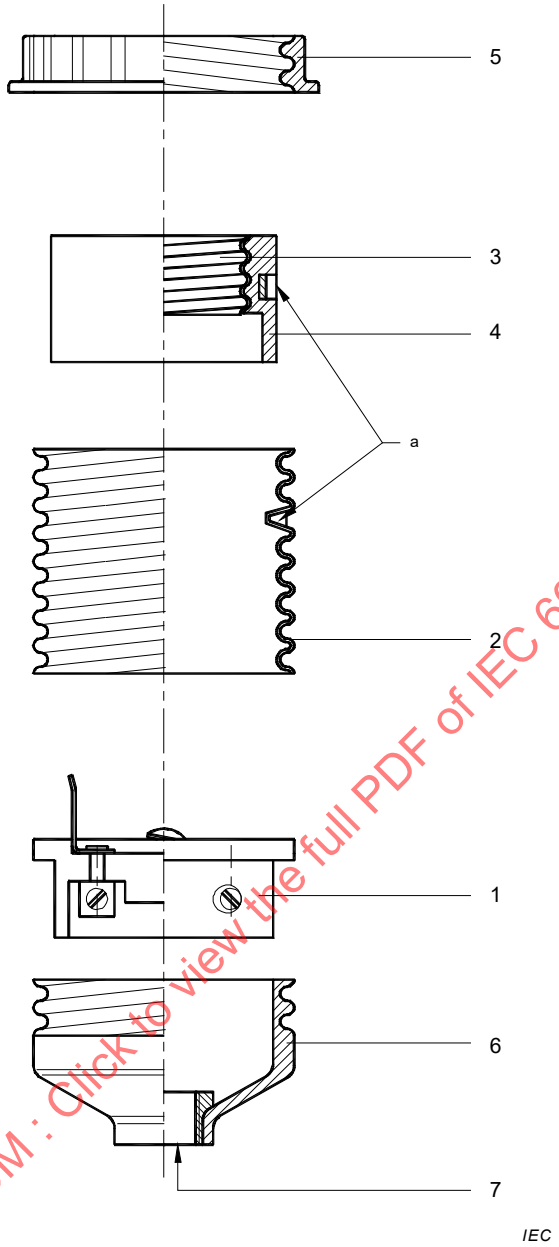

Key

1 terminal/contact assembly

2 outer shell

3 screw shell

4 insulating ring

5 shade ring

6 dome

7 threaded entry

The drawings are intended only to show typical parts of a lampholder and should not limit the design.

[a] In this example, parts 2, 3 and 4 are permanently connected together. In other constructions parts 1 and 3 may form one assembly.

Figure 17 – Clarification of some definitions

IECNORM.COM : Click to view the full PDF of IEC 60238:2016 RLV

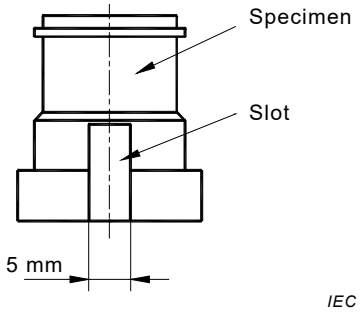

For E14 and E27 lampholders, a slot having a width of 5 mm is made to allow entry of the needle and for ventilation.

For E40 lampholders no slot is required.

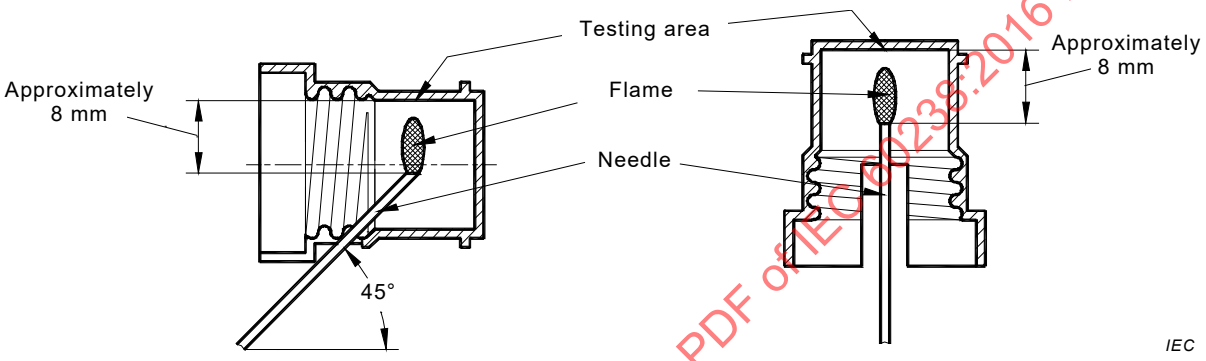

The left hand drawing shows how to perform the needle-flame test for testing the side-contact area (not applicable to lampholders E40).

The right-hand drawing shows how to perform the needle-flame test for testing the centre-contact area.

The minimum length of the needle is 35 mm.

Figure 18 – Preparation of specimens for the needle-flame test of 21.4

IECNORM.COM : Click to view the full PDF of IEC 60238:2016 RLV

Annex A
(normative)

Season cracking/corrosion test

In the interest of environmental protection, the following requirements relating to test solution, volume and volume of vessel can be modified at the discretion of the test laboratory.

In this event, the test vessel should retain a volume in the range 500 to 1 000 times larger than the volume of the sample and the volume of test solution should be such that the ratio of vessel volume to solution volume is in the range of 20:1 to 10:1. In case of doubt, however, the conditions of Clause A.1 apply.

A.1 Test cabinet

Closeable glass vessels shall be used for the test. These may, for example, be desiccator vessels or simple glass troughs with ground rim and lid. The vessel volume shall be at least 10 l.

A certain ratio of test space to volume of test solution shall be maintained (20:1 to 10:1).

A.2 Test solution

Preparation of 1 l of solution:

Dissolve 107 g ammonium chloride (reagent grade NH_4Cl) in about 0,75 l of distilled or fully demineralized water and add as much of 30 % sodium hydroxide solution (prepared from reagent grade NaOH and distilled or fully demineralized water) as is necessary to reach a pH value of 10 at 22 °C. For other temperatures, adjust this solution to the corresponding pH values specified in Table A.1.

Table A.1 – pH adjustment

Temperature °C	Test solution pH
22 ± 1	10,0 ± 0,1
25 ± 1	9,9 ± 0,1
27 ± 1	9,8 ± 0,1
30 ± 1	9,7 ± 0,1

After the pH adjustment, make up to 1 l with distilled or fully demineralized water. This does not change the pH value any further.

Keep the temperature constant in any event to within ±1 °C during the pH adjustment, and carry out the pH measurement using an instrument which permits an adjustment of the pH value to within ±0,02.

The test solutions may be used over a prolonged period, but the pH value, which represents a measure of the ammonia concentration in the vapour atmosphere, shall be checked at least every three weeks and adjusted if necessary.

IECNORM.COM : Click to view the full PDF of IEC 60238:2016 RLV

A.3 Test procedure

Introduce, preferably suspended, the specimens in the test cabinet in such a way that the ammonia vapour can take effect unhindered. The specimens shall not dip into the test solution nor touch each other. Supports or suspension devices shall be made of materials which are not susceptible to attack by ammonia vapour, e.g. glass or porcelain.

Testing shall be carried out at a constant temperature of (30 ± 1) °C to exclude visible condensed water formation caused by temperature fluctuations, which could severely falsify the test result.

Prior to testing, the test cabinet containing the test solution shall be brought to a temperature of (30 ± 1) °C. The test cabinet shall subsequently be filled as quickly as possible with the specimens pre-heated to 30 °C and closed.

This moment is to be considered the beginning of the test.

IECNORM.COM : Click to view the full PDF of IEC 60238:2016 RLV

Annex B
(informative)

Guidance for requirements in IEC 61058-1 applicable to switches in lampholders (see 14.2)

The clauses and subclauses mentioned in Annex B refer to IEC 61058-1:2000.

6 Rating

Subclauses 6.1 and 6.3 are applicable with the following limitations:

6.1 The maximum rated voltage is 250 V.

6.3 The maximum rated current is 2 A.

7.1 Classification of switches

7.1.1 According to nature of supply

Only 7.1.1.1 is applicable.

7.1.2 According to type of load to be controlled by each circuit of the switch

Only 7.1.2.4, 7.1.2.7 and 7.1.2.8 are applicable.

7.1.3 According to ambient temperature

Only 7.1.3.2 is applicable.

7.1.4 According to number of operating cycles

Only 7.1.4.4 is applicable.

For switched lampholders intended to be used in refrigerators or food freezers, 7.1.4.2 applies if the switch is actuated by the door of the refrigerator or food freezer.

7.1.9 According to the glow wire temperature

Only 7.1.9.1 is applicable.

8 Marking and documentation

Not applicable; 13.3 of this standard applies.

16 Heating

16.1 General requirements

Switches in lampholders intended to be used in refrigerators or food freezers are tested at the rated operating temperatures.

IECNORM.COM : Click to view the full PDF of IEC 60238:2016 RLV

20 Clearances, creepage distances, solid insulation and coatings of rigid printed board assemblies

20.2 Creepage distances

Material group IIIb is not useable.

For switched lampholders intended to be used in refrigerators or food freezers, Note 5 is applicable.

IECNORM.COM : Click to view the full PDF of IEC 60238:2016 RLV

Annex C
(informative)

Guidance for special requirements in appliance standards – Household and similar electrical appliances

This standard is based on the requirements of the IEC 60598 series for luminaires. For application in other appliances (e.g. household appliances) the requirements of the relevant appliance standard should be observed.

C.1 List of relevant standards

The following list contains references to appliance standards in which experience has shown that lampholders covered by this standard may be built-in. This list shows a selection of the existing standards and does not lay claim to be exhaustive.

Publication	Title
IEC 60335-1	Household and similar electrical appliances – Safety – Part 1: General requirements
IEC 60335-2-6	Household and similar electrical appliances – Safety – Part 2-6: Particular requirements for stationary cooking ranges, hobs, ovens and similar appliances
IEC 60335-2-9	Household and similar electrical appliances – Safety – Part 2-9: Particular requirements for grills, toasters and similar portable cooking appliances
IEC 60335-2-11	Household and similar electrical appliances – Safety – Part 2-11: Particular requirements for tumble dryers
IEC 60335-2-24	Household and similar electrical appliances – Safety – Part 2-24: Particular requirements for refrigerating appliances, ice-cream appliances and ice-makers
IEC 60335-2-25	Household and similar electrical appliances – Safety – Part 2-25: Particular requirements for microwave ovens, including combination microwave ovens
IEC 60335-2-27	Household and similar electrical appliances – Safety – Part 2-27: Particular requirements for appliances for skin exposure to ultraviolet and infrared radiation
IEC 60335-2-31	Household and similar electrical appliances – Safety – Part 2-31: Particular requirements for range hoods and other cooking fume extractors
IEC 60335-2-36	Household and similar electrical appliances – Safety – Part 2-36: Particular requirements for commercial electric cooking ranges, ovens, hobs and hob elements
IEC 60335-2-42	Household and similar electrical appliances – Safety – Part 2-42: Particular requirements for commercial electric forced convection ovens, steam cookers and steam-convection ovens
IEC 60335-2-43	Household and similar electrical appliances – Safety – Part 2-43: Particular requirements for clothes dryers and towel rails
IEC 60335-2-49	Household and similar electrical appliances – Safety – Part 2-49: Particular requirements for commercial electric hot cupboards
IEC 60335-2-59	Household and similar electrical appliances – Safety – Part 2-59: Particular requirements for insect killers
IEC 60335-2-99	Household and similar electrical appliances – Safety – Part 2-99: Particular requirements for commercial electric hoods

IECNORM.COM : Click to view the full PDF of IEC 60238:2016 RLV

C.2 Reference to special requirements

C.2.1 IEC 60335-1:2001

Clause 8 – Protection against access to live parts

Clause 11 – Heating

Table 3 – Maximum normal temperature rises

Clause 24 – Components

Subclauses 24.1, 24.1.3 and 24.1.6 apply.

Clause 29 – Clearances, creepage distances and solid insulation

Requirements regarding resistance to tracking are given in 29.2.

Requirements regarding thickness of solid insulation are given in 29.3.

Clause 30 – Resistance to heat and fire

Annex E (normative) – Needle-flame test

Annex H (normative) – Switches

Annex N (normative) – Proof tracking test

Annex O (informative) – Selection and sequence of the tests of Clause 30

C.2.2 IEC 60335-2-24:2002

Clause 7 – Marking and instructions

There is no special marking requirement for lampholders within Clause 7 of IEC 60335-2-24:2002. Nevertheless the following requirement is considered to be essential:

In case of lampholders intended for use in a refrigerated compartment of refrigerators and food freezers, the rated minimum temperature to which the lampholder can be subjected shall be marked on the lampholder. (e.g. –30 °C).

Clause 8 – Protection against access to live parts

Clause 24 – Components

Particular requirements for switches in doors are given in 24.1.3.

Clause 29 – Clearances, creepage distances and solid insulation

Requirements regarding resistance to tracking are given in 29.2:

For lampholders intended for use in a refrigerated compartment of refrigerators and food freezers, the specimen shall withstand 50 drops without failure at a test voltage of PTI 250.

IECNORM.COM : Click to view the full PDF of IEC 60238:2016 RLV

Annex D
(informative)

Schedule of amended subclauses containing more serious/critical requirements which require products to be retested

The schedule of clauses given in Annex D details the requirements of this ninth edition of IEC 60238 which require retesting to show compliance to this updated standard. Retesting may not be required in cases where examination of previous test results confirms conformity.

a) Subclause 10.2: Additional pull test requirements for E5 and E10 lampholders with a separate insert part mounted in an outer sleeve (candle shaped lampholders).

IECNORM.COM : Click to view the full PDF of IEC 60238:2016 RLV

Bibliography

IEC 60061 (all parts), *Lamp caps and holders together with gauges for the control of interchangeability and safety*

IEC 60061-4, *Lamp caps and holders together with gauges for the control of interchangeability and safety – Part 4: Guidelines and general information*

IEC 60068-2-20, *Environmental testing – Part 2-20: Tests – Test T: Test methods for solderability and resistance to soldering heat of devices with leads*

IEC 60335-1:2001, *Household and similar electrical appliances – Safety – Part 1: General requirements*

IEC 60335-2-24:2002, *Household and similar electrical appliances – Safety – Part 2-24: Particular requirements for refrigerating appliances, ice-cream appliances and ice-makers*

IEC 60598 (all parts), *Luminaires*

IEC 60664-1, *Insulation coordination for equipment within low-voltage systems – Part 1: Principles, requirements and tests*

IEC 60695-2-10, *Fire hazard testing – Part 2-10: Glowing/hot-wire based test methods – Glow-wire apparatus and common test procedure*

IECNORM.COM : Click to view the full PDF of IEC 60238:2016 RLV

IECNORM.COM : Click to view the full PDF of IEC 60238:2016 RLV

SOMMAIRE

AVANT-PROPOS 82
1 Domaine d'application 84
2 Références normatives 85
3 Termes et définitions 86
4 Exigences générales 90
5 Conditions générales des essais 90
6 Valeurs normalisées 91
7 Classification 92
8 Marquage 93
9 Dimensions 96
10 Protection contre les chocs électriques 98
11 Bornes 101
12 Dispositions en vue de la mise à la terre 104
13 Construction 106
14 Douilles à interrupteur 111
15 Résistance à l'humidité, résistance d'isolement et rigidité diélectrique 112
16 Résistance mécanique 114
17 Vis, parties transportant le courant et connexions 119
18 Lignes de fuite et distances dans l'air 121
19 Fonctionnement normal 124
20 Généralités sur la résistance à la chaleur 125
21 Résistance à la chaleur, au feu et aux courants de cheminement 127
22 Protection contre les contraintes résiduelles excessives (fissurations intercristallines) et contre la rouille 130
Annexe A (normative) Essai de fissuration intercristalline et de corrosion 152
Annexe B (informative) Lignes directrices pour le choix des exigences de l'IEC 61058-1 applicables aux interrupteurs de douilles (voir 14.2) 154
Annexe C (informative) Lignes directrices relatives aux exigences spécifiques des normes d'appareillage – Appareils électrodomestiques et analogues 156
Annexe D (informative) Liste des paragraphes amendés incluant des exigences plus strictes/critiques qui nécessitent la réalisation de nouveaux essais sur les produits 158
Bibliographie 159

Figure 1a – Filetage des raccords pour douilles de lampes: filetage métrique. Profil de base et profil d'exécution pour l'écrou et pour la vis 132
Figure 1b – Filetage des raccords pour douilles de lampes: filetage ISO au pas du gaz. Profil de base et profil d'exécution pour l'écrou et pour la vis 133
Figure 2a – Calibres pour filetage métrique pour raccords de douilles 134
Figure 2b – Calibres pour filetage ISO au pas du gaz pour raccords de douilles 135
Figure 3 – Calibre pour les trous de fixation des douilles à embase 136
Figure 4 – Appareil pour les essais de fonctionnement normal 137
Figure 5 – Culots d'essai pour l'essai de l'Article 18 138
Figure 6 – Appareil pour la résistance à la torsion 139

IECNORM.COM : Click to view the full PDF of IEC 60238:2016 RLV

Figure 7 – Tambour tournant 140
Figure 8 – Appareil pour l'essai de choc 141
Figure 9 – Appareil pour la résistance à la compression 142
Figure 10 – Appareil pour l'essai à la bille 142
Figure 11 – Culot d'essai pour les essais de 15.4 et 20.3 143
Figure 12 – Appareil pour la résistance à la flexion 144
Figure 13 – Culot d'essai A et culot d'essai B pour les douilles E14 146
Figure 14 – Culot d'essai pour les douilles E27 147
Figure 15 – Culot d'essai pour les douilles E40 148
Figure 16 – Doigt d'épreuve normalisé (d'après l'IEC 60529) 149
Figure 17 – Clarification de quelques définitions 150
Figure 18 – Préparation des spécimens pour l'essai au brûleur-aiguille de 21.4 151

Tableau 1 – Epaisseur des chemises filetées et des contacts 97
Tableau 2 – Longueurs effectives minimales du filetage 97
Tableau 3 – Dimensions des entrées taraudées et des vis d'arrêt 98
Tableau 4 – Dimensions minimales des bornes à trous 102
Tableau 5 – Dimensions minimales des bornes à serrage 103
Tableau 6 – Valeurs de traction et de torsion 109
Tableau 7 – Couple d'insertion 110
Tableau 8 – Couples de dévissage minimal et maximal 111
Tableau 9 – Dimensions des culots d'essai 115
Tableau 10 – Hauteurs de chute 116
Tableau 11 – Valeurs de déformation maximales 118
Tableau 12 – Valeurs de torsion 119
Tableau 13a – Distances minimales pour les tensions sinusoïdales alternatives (50/60 Hz): Catégorie de résistance aux chocs II 122
Tableau 13b – Distances minimales pour les tensions sinusoïdales alternatives (50/60 Hz): Catégorie de résistance aux chocs III 123
Tableau 14 – Distances minimales pour les tensions d'impulsion non sinusoïdales 123
Tableau 15 – Températures dans l'étuve 126
Tableau A.1 – Réglage du pH 152

IECNORM.COM : Click to view the full PDF of IEC 60238:2016 RLV

COMMISSION ÉLECTROTECHNIQUE INTERNATIONALE

DOUILLES À VIS EDISON POUR LAMPES

AVANT-PROPOS

1) La Commission Electrotechnique Internationale (IEC) est une organisation mondiale de normalisation composée de l'ensemble des comités électrotechniques nationaux (Comités nationaux de l'IEC). L'IEC a pour objet de favoriser la coopération internationale pour toutes les questions de normalisation dans les domaines de l'électricité et de l'électronique. A cet effet, l'IEC – entre autres activités – publie des Normes internationales, des Spécifications techniques, des Rapports techniques, des Spécifications accessibles au public (PAS) et des Guides (ci-après dénommés "Publication(s) de l'IEC"). Leur élaboration est confiée à des comités d'études, aux travaux desquels tout Comité national intéressé par le sujet traité peut participer. Les organisations internationales, gouvernementales et non gouvernementales, en liaison avec l'IEC, participent également aux travaux. L'IEC collabore étroitement avec l'Organisation Internationale de Normalisation (ISO), selon des conditions fixées par accord entre les deux organisations.

2) Les décisions ou accords officiels de l'IEC concernant les questions techniques représentent, dans la mesure du possible, un accord international sur les sujets étudiés, étant donné que les Comités nationaux de l'IEC intéressés sont représentés dans chaque comité d'études.

3) Les Publications de l'IEC se présentent sous la forme de recommandations internationales et sont agréées comme telles par les Comités nationaux de l'IEC. Tous les efforts raisonnables sont entrepris afin que l'IEC s'assure de l'exactitude du contenu technique de ses publications; l'IEC ne peut pas être tenue responsable de l'éventuelle mauvaise utilisation ou interprétation qui en est faite par un quelconque utilisateur final.

4) Dans le but d'encourager l'uniformité internationale, les Comités nationaux de l'IEC s'engagent, dans toute la mesure possible, à appliquer de façon transparente les Publications de l'IEC dans leurs publications nationales et régionales. Toutes divergences entre toutes Publications de l'IEC et toutes publications nationales ou régionales correspondantes doivent être indiquées en termes clairs dans ces dernières.

5) L'IEC elle-même ne fournit aucune attestation de conformité. Des organismes de certification indépendants fournissent des services d'évaluation de conformité et, dans certains secteurs, accèdent aux marques de conformité de l'IEC. L'IEC n'est responsable d'aucun des services effectués par les organismes de certification indépendants.

6) Tous les utilisateurs doivent s'assurer qu'ils sont en possession de la dernière édition de cette publication.

7) Aucune responsabilité ne doit être imputée à l'IEC, à ses administrateurs, employés, auxiliaires ou mandataires, y compris ses experts particuliers et les membres de ses comités d'études et des Comités nationaux de l'IEC, pour tout préjudice causé en cas de dommages corporels et matériels, ou de tout autre dommage de quelque nature que ce soit, directe ou indirecte, ou pour supporter les coûts (y compris les frais de justice) et les dépenses découlant de la publication ou de l'utilisation de cette Publication de l'IEC ou de toute autre Publication de l'IEC, ou au crédit qui lui est accordé.

8) L'attention est attirée sur les références normatives citées dans cette publication. L'utilisation de publications référencées est obligatoire pour une application correcte de la présente publication.

9) L'attention est attirée sur le fait que certains des éléments de la présente Publication de l'IEC peuvent faire l'objet de droits de brevet. L'IEC ne saurait être tenue pour responsable de ne pas avoir identifié de tels droits de brevets et de ne pas avoir signalé leur existence.

La Norme internationale IEC 60238 a été établie par le sous-comité 34B: Culots et douilles, du comité d'études 34 de l'IEC: Lampes et équipements associés.

Cette neuvième édition annule et remplace la huitième édition parue en 2004, l'Amendement 1: 2008 et l'Amendement 2:2011. Cette édition constitue une révision technique.

Cette édition inclut les modifications techniques majeures suivantes par rapport à l'édition précédente:

a) Addition d'un essai de traction pour certaines douilles E5 et E10.

b) Une Annexe D répertoriant les exigences/articles amendés nécessitant la réalisation de nouveaux essais sur les produits.

IECNORM.COM : Click to view the full PDF of IEC 60238:2016 RLV

Le texte de cette norme est issu des documents suivants:

FDIS	Rapport de vote
34B/1852/FDIS	34B/1860/RVD

Le rapport de vote indiqué dans le tableau ci-dessus donne toute information sur le vote ayant abouti à l'approbation de cette norme.

Cette publication a été rédigée selon les Directives ISO/IEC, Partie 2.

Dans cette norme, les caractères d'imprimerie suivants sont utilisés:

– *les déclarations de conformité: en italique*.

Le comité a décidé que le contenu de cette publication ne sera pas modifié avant la date de stabilité indiquée sur le site web de l'IEC sous "http://webstore.iec.ch" dans les données relatives à la publication recherchée. A cette date, la publication sera

- reconduite,
- supprimée,
- remplacée par une édition révisée, ou
- amendée.

IECNORM.COM : Click to view the full PDF of IEC 60238:2016 RLV

DOUILLES À VIS EDISON POUR LAMPES

1 Domaine d'application

La présente Norme internationale s'applique aux douilles à vis Edison E14, E27 et E40 destinées uniquement au raccordement des lampes et des semi-luminaires[1] à l'alimentation.

Elle s'applique aussi aux douilles à interrupteur destinées exclusivement aux circuits de courant alternatif dont la tension de travail ne dépasse pas 250 V (valeur efficace).

La présente norme est également applicable aux douilles à vis Edison E5 destinées à être raccordées au réseau d'alimentation de lampes montées en série et dont la tension de travail ne dépasse pas 25 V, pour utilisation à l'intérieur, ainsi qu'aux douilles à vis Edison E10 destinées au raccordement au réseau d'alimentation de lampes montées en série et dont la tension de travail ne dépasse pas 60 V, pour utilisation à l'intérieur ou à l'extérieur. Elle s'applique également aux douilles E10 à incorporer, pour le raccordement de lampes individuelles à l'alimentation. Ces douilles ne sont pas destinées à la vente au détail.

Pour autant que la présente norme soit raisonnablement applicable, elle couvre également d'autres douilles que celles à vis Edison destinées au raccordement à l'alimentation de lampes branchées en série.

NOTE Ce type de douille est employé par exemple dans les guirlandes lumineuses pour arbres de Noël.

Pour autant que l'on puisse raisonnablement l'appliquer, cette norme couvre également les adaptateurs.

La présente norme couvre aussi les douilles totalement ou partiellement intégrées au luminaire ou prévues pour être montées dans les appareils. Elle ne couvre que les exigences relatives à la douille. Pour toutes les autres exigences telles que la protection contre les chocs électriques dans la zone des bornes ou du culot de la lampe, les exigences de la norme de l'appareil concerné sont respectées et les essais réalisés après incorporation dans l'appareil approprié, lorsque cet appareil est soumis aux essais selon sa propre norme. De telles douilles ainsi que les douilles pourvues d'un écran extérieur enclenchable, destinées aux fabricants de luminaires exclusivement, ne sont pas destinées à la vente au détail.

La présente norme s'applique aux douilles utilisées à l'intérieur ou à l'extérieur de bâtiments et destinées aux installations d'éclairage domestique ou industriel. Elle s'applique également aux douilles-bougies. Des constructions spéciales peuvent être exigées dans des endroits où règnent des conditions particulières, comme dans le cas de l'éclairage public, à bord des navires, dans les véhicules et dans les locaux à atmosphère dangereuse présentant, par exemple, des risques d'explosion.

La présente norme n'est pas applicable aux douilles E26d pour lampes à trois puissances.

La présente norme est fondée sur les données suivantes, relatives aux lampes pour éclairage général:

– les culots E14 sont utilisés pour des lampes absorbant un courant ne dépassant pas 2 A;
– les culots E27 sont utilisés pour des lampes absorbant un courant ne dépassant pas 4 A;
– les culots E40 sont utilisés pour des lampes absorbant un courant ne dépassant pas 16 A, ou 32 A si la tension nominale de l'alimentation ne dépasse pas 130 V (voir 5.5 et 6.3).

[1] Les exigences applicables aux douilles pour semi-luminaires sont à l'étude.

IECNORM.COM : Click to view the full PDF of IEC 60238:2016 RLV

Quand les douilles sont utilisées dans des luminaires, leurs températures maximales de travail sont spécifiées dans l'IEC 60598.

2 Références normatives

Les documents suivants sont cités en référence de manière normative, en intégralité ou en partie, dans le présent document et sont indispensables pour son application. Pour les références datées, seule l'édition citée s'applique. Pour les références non datées, la dernière édition du document de référence s'applique (y compris les éventuels amendements).

IEC 60061-1, *Culots de lampes et douilles ainsi que calibres pour le contrôle de l'interchangeabilité et de la sécurité – Partie 1: Culots de lampes*

IEC 60061-2, *Culots de lampes et douilles ainsi que calibres pour le contrôle de l'interchangeabilité et de la sécurité – Partie 2: Douilles*

IEC 60061-3, *Culots de lampes et douilles ainsi que calibres pour le contrôle de l'interchangeabilité et de la sécurité – Partie 3: Calibres*

IEC 60068-2-32:1975, *Essais fondamentaux climatiques et de robustesse mécanique – Partie 2-32: Essais – Essai Ed: Chute libre*

IEC 60068-2-75:2014, *Essais d'environnement – Partie 2-75: Essais – Essai Eh: Essais aux marteaux*

IEC 60112:2003, *Méthode de détermination des indices de résistance et de tenue au cheminement des matériaux isolants solides*
Amendement 1:2009

IEC 60227 (toutes les parties), *Conducteurs et câbles isolés au polychlorure de vinyle, de tension nominale au plus égale à 450/750 V*

IEC 60245 (toutes les parties), *Conducteurs et câbles isolés au caoutchouc – Tension assignée au plus égale à 450/750 V*

IEC 60352-1:1997, *Connexions sans soudure – Partie 1: Connexions enroulées – Règles générales, méthodes d'essai et guide pratique*

IEC 60399, *Filetage à filets ronds pour douilles avec bague support d'abat-jour*

IEC 60417, *Symboles graphiques utilisables sur le matériel* (disponible sous: http://www.graphical-symbols.info/equipment)

IEC 60529:1989, *Degrés de protection procurés par les enveloppes (Code IP)*
Amendement 1:1999
Amendement 2:2013 [2]

IEC 60598-1, *Luminaires – Partie 1: Exigences générales et essais*

IEC 60630, *Encombrement maximal des lampes à incandescence*

IECNORM.COM : Click to view the full PDF of IEC 60238:2016 RLV

[2] Il existe une édition consolidée 2.2 (2013) comprenant l'édition 2.0 (1989) et ses Amendement 1 (1999) et Amendement 2 (2013).

IEC 60695-2-11:2014, *Essais relatifs aux risques du feu – Partie 2-11: Essais au fil incandescent/chauffant – Méthode d'essai d'inflammabilité pour produits finis*

IEC 60695-11-5, *Essais relatifs aux risques du feu – Partie 11-5: Flammes d'essai – Méthode d'essai au brûleur-aiguille – Appareillage, dispositif d'essai de vérification et lignes directrices*

IEC 61058-1:2000, *Interrupteurs pour appareils – Partie 1: Règles générales*

ISO 4046-4:2002, *Papier, carton, pâtes et termes connexes – Vocabulaire – Partie 4: Catégories et produits transformés de papier et de carton*

3 Termes et définitions

Pour les besoins du présent document, les termes et définitions suivants s'appliquent.

3.1
douille à serre-fil
douille pourvue d'un dispositif retenant un câble souple par lequel elle peut être suspendue

3.2
douille à entrée taraudée
douille pourvue d'une pièce taraudée au point d'entrée des câbles d'alimentation, permettant à la douille d'être montée sur un support fileté

Note 1 à l'article: La douille à entrée taraudée était précédemment nommée “douille à raccord”

3.3
douille à embase
douille conçue pour permettre le montage au moyen d'une embase associée ou incorporée, directement sur une surface d'appui ou une boîte appropriée

3.4
douille à incorporer
douille conçue pour être incorporée dans un luminaire, dans une enveloppe supplémentaire ou dans un dispositif analogue

3.4.1
douille non protégée
douille à incorporer, conçue de manière que des moyens additionnels, par exemple une enveloppe, soient indispensables pour satisfaire aux exigences de la présente norme concernant la protection contre les chocs électriques

3.4.2
douille protégée
douille à incorporer, conçue de manière qu'elle satisfasse par elle-même aux exigences de la présente norme concernant la protection contre les chocs électriques et, le cas échéant, la classification IP

3.5
douille indépendante
douille conçue de manière qu'elle puisse être installée séparément d'un luminaire tout en assurant toute la protection nécessaire conformément à sa classification et à son marquage

IECNORM.COM : Click to view the full PDF of IEC 60238:2016 RLV

3.6
ensemble borne/contact
pièce ou ensemble de pièces assurant la connexion entre l'extrémité d'un conducteur d'alimentation et les faces de contact du culot de lampe correspondant

Note 1 à l'article: Pour plus de précisions sur certaines définitions, voir également la Figure 17.

3.7
chemise extérieure
pièce cylindrique protégeant l'utilisateur contre le contact avec le culot de la lampe

Note 1 à l'article: Elle peut être munie ou non d'un filetage extérieur pour fixation d'une bague d'abat-jour.

Note 2 à l'article: Pour plus de précisions sur certaines définitions, voir également la Figure 17.

3.7.1
écran extérieur enclenchable
écran extérieur pour un assemblage sans vis qui ne contient pas d'écran vissable

Note 1 à l'article: Il convient que la douille ne soit pas utilisée quand l'écran extérieur enclenchable est enlevé. Il est par conséquent recommandé de positionner la marque d'approbation, lorsqu'il y en a une, de telle façon qu'elle ne soit plus visible lorsque ce type d'écran extérieur est enlevé.

3.8
chemise filetée
pièce cylindrique munie d'un filetage intérieur Edison pour retenir la lampe (le culot) insérée

Note 1 à l'article: Dans quelques constructions, la chemise filetée est fixée de façon permanente ou intégrée dans la chemise extérieure.

Note 2 à l'article: Pour plus de précisions sur certaines définitions, voir également la Figure 17.

3.9
bague d'isolement
pièce intermédiaire cylindrique en matière isolante séparant la chemise filetée métallique et la chemise extérieure métallique

Note 1 à l'article: Pour plus de précisions sur certaines définitions, voir également la Figure 17.

3.10
bague d'abat-jour
pièce cylindrique ayant un filetage interne ou d'autres moyens pour se fixer sur la pièce correspondante du corps de la douille et destinée à monter un abat-jour

Note 1 à l'article: Pour plus de précisions sur certaines définitions, voir également la Figure 17.

3.11
fond
partie d'une douille à serre-fil ou d'une douille à entrée taraudée qui protège les bornes de raccordement

Note 1 à l'article: Pour plus de précisions sur certaines définitions, voir également la Figure 17.

3.12
isolation principale
isolation des parties actives destinée à assurer la protection principale contre les chocs électriques

Note 1 à l'article: L'isolation principale ne comprend pas nécessairement l'isolation exclusivement utilisée à des fins fonctionnelles.

IECNORM.COM : Click to view the full PDF of IEC 60238:2016 RLV

3.13
isolation supplémentaire
isolation indépendante prévue en plus de l'isolation principale en vue d'assurer la protection contre les chocs électriques en cas de défaut de l'isolation principale

3.14
double isolation
isolation comprenant à la fois l'isolation principale et l'isolation supplémentaire

3.15
isolation renforcée
système d'isolation unique des parties sous tension assurant un degré de protection contre les chocs électriques équivalent à une double isolation dans les conditions spécifiées

Note 1 à l'article: L'expression «système d'isolation» ne sous-entend pas que l'isolation se compose d'une pièce homogène. Le système peut comporter plusieurs couches qui ne peuvent pas être soumises aux essais séparément comme isolation principale ou supplémentaire.

3.16
partie active
partie conductrice susceptible de produire un choc électrique

3.17
essai de type
essai ou série d'essais effectués sur un échantillon d'essai de type afin de vérifier la conformité de la conception d'un produit donné aux exigences de la norme concernée

3.18
échantillon d'essai de type
échantillon composé d'un ou de plusieurs spécimens semblables, présenté(s) par le fabricant ou par le vendeur responsable afin de le soumettre aux essais de type

3.19
semi-luminaire
ensemble similaire à une lampe autoballastée mais dans lequel le remplacement de la lampe et/ou de l'amorceur est prévu

3.20
température assignée de fonctionnement
température maximale prévue pour la douille

3.21
température minimale assignée
température la plus basse pour laquelle la douille est conçue (applicable uniquement aux douilles de lampes destinées à être utilisées dans des réfrigérateurs ou congélateurs)

3.22
douille à angle
douille dont la partie arrière (entrée filetée et/ou fond) fait un angle avec l'axe de la chemise filetée

3.23
douille avec dispositif de frein
douille avec un dispositif destiné à prévenir tout dévissage de la lampe dans la douille

Note 1 à l'article: Les lampes sont susceptibles, par exemple, de se dévisser sous l'effet des variations de température ou des vibrations.

IECNORM.COM : Click to view the full PDF of IEC 60238:2016 RLV

3.24
catégorie de tenue aux chocs
chiffre définissant une condition de surtension transitoire

Note 1 à l'article: Les catégories de tenue aux chocs I, II, III et IV sont utilisées.

a) But de la classification des catégories de tenue aux chocs

Les catégories de tenue aux chocs servent à différencier les différents degrés de disponibilité des équipements en ce qui concerne les attentes exigées en matière de continuité de service et de tolérance des risques de défauts.

En sélectionnant les niveaux de tenue aux chocs des équipements, il est possible de réaliser la coordination de l'isolement pour l'installation complète en réduisant le risque de défaut à un niveau acceptable qui servira de base dans la maîtrise de la surtension.

Un chiffre plus élevé désignant la catégorie de tenue aux chocs indique une tenue aux chocs de l'équipement plus élevée, et permet un plus grand choix de méthodes pour la maîtrise de la surtension.

Le concept de catégorie de tenue aux chocs est utilisé pour les équipements directement alimentés par le réseau.

b) Description des catégories de tenue aux chocs

Un équipement de catégorie de tenue aux chocs I est un équipement destiné à être connecté aux installations électriques fixes des bâtiments. Des moyens de protection sont pris à l'extérieur de l'équipement – soit dans l'installation fixe soit entre l'installation fixe et l'équipement – pour limiter les surtensions transitoires à un niveau donné.

Un équipement de catégorie de tenue aux chocs II est un équipement destiné à être connecté aux installations électriques fixes des bâtiments.

Un équipement de catégorie de tenue aux chocs III est un équipement qui constitue une partie des installations électriques fixes et des autres équipements dont le degré de disponibilité attendu est plus élevé.

Un équipement de catégorie de tenue aux chocs IV est destiné à être utilisé à proximité ou dans les installations électriques des bâtiments en amont du tableau de distribution.

3.25
circuit primaire
circuit directement connecté au réseau alternatif

Note 1 à l'article: Il comporte, par exemple, les moyens de connexion au réseau alternatif, les enroulements primaires des transformateurs, moteurs et autres dispositifs en charge.

3.26
circuit secondaire
circuit qui n'a pas de connexion directe avec le circuit primaire en tirant sa puissance d'un transformateur, convertisseur ou système d'isolation équivalent, ou d'un accumulateur

Note 1 à l'article: Exception: les autotransformateurs. Bien qu'ayant une connexion directe avec le circuit primaire, leur partie connectée est également considérée comme un circuit secondaire au sens de la présente définition.

Note 2 à l'article: Les régimes transitoires dans de tels circuits sont amortis par l'enroulement primaire correspondant. Les ballasts inductifs réduisent également la valeur de la tension des régimes transitoires. En conséquence, les composants situés après un circuit primaire ou après un ballast inductif peuvent être adaptés à une catégorie de tenue aux chocs un niveau plus bas, c'est-à-dire une catégorie de tenue aux chocs II.

3.27
adaptateur
composant utilisé pour la connexion électrique et mécanique d'une lampe à une douille

Note 1 à l'article: Cette définition est spécifique à la présente norme. La définition d'un adaptateur est susceptible de varier grandement selon son utilisation. Dans la plupart des cas, un tel composant est utilisé pour adapter les différences de diamètre de filetage entre la douille et la lampe.

3.28
douille protégée à isolation renforcée
douille à incorporer conçue de façon qu'elle satisfasse par elle-même aux exigences des parties à isolation double ou renforcée dans les applications de classe II

IECNORM.COM : Click to view the full PDF of IEC 60238:2016 RLV

3.29
douille à isolation partiellement renforcée
douille à incorporer conçue de façon que certaines parties de la douille nécessitent des dispositions supplémentaires pour satisfaire aux exigences concernant l'isolation double ou renforcée

Note 1 à l'article: Dans certains cas, les dimensions sont susceptibles d'être satisfaites uniquement après montage dans le luminaire.

4 Exigences générales

Les douilles de lampes doivent être conçues et construites de façon qu'en usage normal leur fonctionnement soit sûr et que l'utilisateur ou l'entourage ne puisse pas être mis en danger.

En général, la conformité est vérifiée en exécutant la totalité des essais spécifiés.

De plus, l'enceinte des douilles indépendantes doit satisfaire aux exigences de l'IEC 60598-1, y compris celles relatives à la classification et au marquage.

5 Conditions générales des essais

5.1 Les essais mentionnés dans la présente norme sont des essais de type.

NOTE Les exigences et tolérances autorisées par cette norme se rapportent à l'essai d'un échantillon d'essai de type soumis à cette fin.

La conformité de l'échantillon d'essai de type n'implique pas la conformité de la totalité de la production du fabricant à cette norme de sécurité.

En plus de l'essai de type, la conformité de production est sous la responsabilité du fabricant et peut comprendre des essais individuels (de série) et d'assurance de la qualité.

Pour de plus amples informations sur les essais de conformité en cours de fabrication, voir l'IEC 60061-4.

5.2 Sauf spécification contraire, les essais sont effectués à une température ambiante de 20 °C ± 5 °C, la douille étant soumise aux essais en état de livraison et installée comme en usage normal.

5.3 L'ensemble des essais et des vérifications est effectué sur un total de

– neuf spécimens pour les douilles sans interrupteur, ou
– 12 spécimens pour les douilles à interrupteur

dans l'ordre des articles ci-après:

– trois spécimens: Articles 2 à 13 (à l'exception des paragraphes 10.1 et 11.2) et Articles 15 à 18;
– trois spécimens: Article 14 (essais des douilles à interrupteur seulement);
– trois spécimens: 10.1, Articles 19 et 20;
– deux spécimens: Article 21 (dont l'un pour l'essai de 21.1 et l'autre pour les essais de 21.3 ou 21.4);
– un spécimen: 21.5 et Article 22.

Pour les essais de douilles avec dispositif de frein, le dispositif de frein doit être enlevé.

Pour les essais des douilles avec dispositif de frein, effectués en conformité avec 13.14, trois spécimens supplémentaires sont exigés avec le dispositif de frein en place.

IECNORM.COM : Click to view the full PDF of IEC 60238:2016 RLV

Pour les essais des bornes sans vis, conformément à 11.2, des spécimens séparés sont en outre nécessaires.

5.4 *En cas de doute, les calibres, les culots d'essai et les mandrins sont vissés dans les spécimens, sauf spécification contraire, en appliquant un des couples de torsion suivants:*

– *0,2 Nm pour les douilles E5;*
– *0,2 Nm pour les douilles E10;*
– *0,2 Nm pour les douilles E14;*
– *0,4 Nm pour les douilles E27;*
– *0,8 Nm pour les douilles E40.*

5.5 *Pour les douilles E40 dont le courant assigné est de 32 A, les essais doivent être effectués sur la base de ce courant assigné.*

5.6 *Les douilles sont considérées comme répondant à la présente norme si aucun des spécimens soumis à la série complète des essais spécifiés en 5.3 ne présente de défaillance.*

Si un spécimen est refusé à un essai, cet essai et ceux qui l'ont précédé, qui peuvent influencer le résultat de cet essai, sont répétés sur un autre lot de spécimens en nombre égal à celui exigé par 5.3, et qui tous doivent alors satisfaire aux essais répétés et aux suivants. Les douilles sont considérées comme ne répondant pas à la présente norme s'il se produit plus d'une défaillance.

6 Valeurs normalisées

6.1 Les tensions assignées normalisées sont 250 V et 500 V.

Pour les douilles E14 et les douilles E27 à interrupteur, la seule tension assignée admissible est 250 V.

Pour les douilles E5 et E10 destinées au raccordement à l'alimentation de lampes connectées en série, la tension assignée ne doit pas dépasser 25 V pour les douilles E5 et 60 V pour les douilles E10.

NOTE 1 Ces valeurs se réfèrent à la tension entre parties de polarité différente.

Pour les douilles E10 destinées au raccordement de lampes individuelles à l'alimentation, seule la tension assignée de 250 V est admise.

NOTE 2 Ces douilles sont également utilisées pour des cas spéciaux tels que les lampes connectées en série où, en raison du faible nombre de lampes, la tension de 60 V par douille est dépassée.

Hormis l'exception indiquée pour les douilles E5 et E10, la tension assignée ne doit pas être inférieure à 250 V. En outre, une tension assignée de 125 V est admise pour les douilles E40.

La conformité est vérifiée par examen du marquage.

6.2 Les valeurs normalisées du courant assigné sont

– 0,2 A pour les douilles E5;
– 0,5 A pour les douilles E10;
– 2 A pour les douilles E14;
– 2 A pour les douilles E27 à interrupteur;

IECNORM.COM : Click to view the full PDF of IEC 60238:2016 RLV

– 4 A pour les autres douilles E27;
– 16 A pour les douilles E40.

Le courant assigné ne doit pas être inférieur à la valeur normalisée.

La conformité est vérifiée par examen du marquage.

6.3 Les douilles E40 à utiliser dans des installations à 125 V peuvent être prévues, en outre, pour un courant assigné de 32 A.

NOTE Cette valeur nominale assignée couvre toutes les tensions jusqu'à 130 V inclus.

La conformité est vérifiée par examen du marquage.

6.4 La température assignée de fonctionnement des douilles prévues pour fonctionner dans des conditions de températures élevées (douilles à marquage T) ne doit pas être inférieure à 140 °C pour les douilles E14, 170 °C pour les douilles E27 et 230 °C pour les douilles E40.

La conformité est vérifiée par examen du marquage.

NOTE Les températures assignées de fonctionnement des douilles à vis Edison sans marquage T sont indiquées dans l'IEC 60598-1, Tableau 12.1. Elles sont

– 135 °C pour les douilles E14;
– 165 °C pour les douilles E27;
– 225 °C pour les douilles E40.

7 Classification

Les douilles sont classées selon 7.1 à 7.6.

7.1 D'après la matière des parties extérieures:

– douilles en matière isolante;
– douilles métalliques.

NOTE Les douilles qui ont des parties extérieures partiellement en métal et les douilles qui comportent des parties extérieures en matière isolante ayant une surface extérieure conductrice, par exemple une chemise extérieure métallisée, sont considérées comme des douilles métalliques (voir 13.3). Cela ne s'applique pas aux entrées taraudées et aux parties extérieures comme une bague d'abat-jour métallique montée à l'extérieur de la douille en matière isolante, qui ne peuvent pas devenir actives même dans le cas d'un défaut d'isolation. Les douilles métalliques à revêtement isolant sont considérées comme des douilles métalliques (voir 10.5).

Pour contrôler si une surface est conductrice ou non, deux lames métalliques d'une largeur de 1,5 mm, d'une longueur de 25 mm et d'un écartement de 2 mm sont appliquées sur cette surface (à revêtement de peinture d'argent conductrice, par exemple). La résistance d'isolement entre les deux lames est alors mesurée conformément à 15.4. La surface est considérée comme étant conductrice si cette résistance est inférieure à 5 MΩ.

7.2 D'après le degré de protection contre la pénétration d'eau:

– douilles ordinaires;
– douilles protégées contre le ruissellement d'eau vertical.

7.3 D'après le dispositif de fixation:

– douilles à entrée taraudée;
– douilles à serre-fil;

IECNORM.COM : Click to view the full PDF of IEC 60238:2016 RLV

– douilles à embase;

– autres douilles.

NOTE D'autres exemples de douilles sont les douilles munies d'un dispositif de suspension mécanique, par exemple un crochet.

7.4 D'après le type:

– douilles à interrupteur, munies d'un interrupteur intégré pour commander la mise sous tension de la lampe;

– douilles sans interrupteur.

7.5 D'après la protection contre les chocs électriques:

– douilles non protégées;

– douilles protégées;

– douilles indépendantes;

– douilles à isolation partiellement renforcée;

– douilles protégées à isolation renforcée.

NOTE Quand une douille est utilisée avec une tension de travail égale à 50 % ou moins de sa tension maximale assignée, elle est susceptible d'être considérée comme une douille à isolation renforcée.

7.6 D'après la résistance à la chaleur:

– douilles pour des températures de fonctionnement assignées allant jusqu'aux limites données en 6.4;

– douilles pour le fonctionnement dans les conditions de haute température (douilles marquées T).

8 Marquage

8.1 Les douilles autres que les douilles E5 et E10 doivent porter les marquages suivants:

– courant assigné, en ampères;

– tension assignée, en volts, et tension d'impulsion assignée, en kV, si elle est supérieure à

- 2,5 kV pour les douilles de 250 V,
- 4 kV pour les douilles de 500 V;

Il convient que la tension d'impulsion assignée de la douille (en kV) soit marquée sur la douille ou indiquée dans le catalogue du fabricant ou document similaire.

NOTE 1 Certaines douilles continuent à indiquer des tensions assignées supérieures à 500 V. C'était la façon autrefois utilisée d'exprimer la tension d'impulsion admissible par l'intermédiaire d'une tension assignée. Pour de telles douilles, les lignes de fuite et distances dans l'air figurent dans l'IEC 60598-1.

– le symbole de la nature du courant, s'il est exigé (pour les douilles comportant un interrupteur seulement);

– la marque d'origine (qui peut prendre la forme d'une marque déposée, d'une marque d'identification du fabricant ou du nom du vendeur responsable);

– la référence du type;

Il convient que la documentation technique disponible du fabricant telle que des catalogues imprimés ou en ligne permette une identification claire de la douille, soit par un numéro de catalogue unique soit par une référence d'identification sur le culot, spécifiant les caractéristiques essentielles et la conception de base du produit, complétée d'une description claire. Les variantes de la conception de base telles que, par exemple, une longueur de câble différente, des moyens de fixation différents, une couleur

IECNORM.COM : Click to view the full PDF of IEC 60238:2016 RLV

différente, etc., qui n'affectent pas la sécurité ou la performance de la douille, peuvent être ignorées dans la référence du type marquée sur le produit. Les variantes incluses dans la procédure d'essai de type sont répertoriées dans les rapports d'essai correspondants.

– le degré de protection contre la pénétration d'eau, pour les douilles protégées contre le ruissellement d'eau vertical (voir 8.2);

– la température assignée de fonctionnement "T", indiquant la plus haute température de fonctionnement, le cas échéant.

Le marquage de la température assignée de fonctionnement n'est pas obligatoire pour les douilles dont la partie extérieure est entièrement en matière céramique. Dans le cas de telles douilles, l'indication doit, le cas échéant, être soit marquée sur la douille soit être mentionnée dans le catalogue du fabricant.

Pour les douilles conformes à cette norme, les distances correspondant à la catégorie de tenue aux chocs II sont normalement applicables. Pour les douilles des équipements dont un degré de disponibilité supérieur est attendu, les distances de la catégorie de tenue aux chocs III peuvent être applicables. Cette information doit figurer dans le catalogue du fabricant ou document similaire.

Les douilles protégées à isolation renforcée offrent un niveau satisfaisant de protection pour une utilisation dans les luminaires où elles sont accessibles en usage normal. Cette information doit être indiquée dans le catalogue du fabricant ou document similaire.

Pour des douilles à isolation partiellement renforcée, des lignes de fuite et distances dans l'air suffisantes par rapport aux surfaces extérieures accessibles nécessiteront des protections additionnelles pour certaines parties de la douille grâce à la conception du luminaire ou en utilisant un ou plusieurs accessoire(s) ou couvercle(s) supplémentaire(s). Cette information doit être indiquée dans le catalogue du fabricant ou document similaire.

Les douilles E10 doivent porter les marquages suivants:

– la tension assignée, en volts;

– la marque d'origine;

– la référence du type;

Il convient que la documentation technique disponible du fabricant telle que des catalogues imprimés ou en ligne permette une identification claire de la douille, soit par un numéro de catalogue unique soit par une référence d'identification sur le culot, spécifiant les caractéristiques essentielles et la conception de base du produit, complétée d'une description claire. Les variantes de la conception de base telles que, par exemple, une longueur de câble différente, des moyens de fixation différents, une couleur différente, etc., qui n'affectent pas la sécurité ou la performance de la douille, peuvent être ignorées dans la référence du type marquée sur le produit. Les variantes incluses dans la procédure d'essai de type sont répertoriées dans les rapports d'essai correspondants.

– le degré de protection contre la pénétration d'eau, le cas échéant.

Les douilles E5 doivent porter les marquages suivants:

– la marque d'origine;

– la référence du type.

Il convient que la documentation technique disponible du fabricant telle que des catalogues imprimés ou en ligne permette une identification claire de la douille, soit par un numéro de catalogue unique soit par une référence d'identification sur le culot, spécifiant les caractéristiques essentielles et la conception de base du produit, complétée d'une description claire. Les variantes de la conception de base telles que, par exemple, une longueur de câble différente, des moyens de fixation différents, une couleur différente, etc., qui n'affectent pas la sécurité ou la performance de la douille, peuvent

IECNORM.COM : Click to view the full PDF of IEC 60238:2016 RLV

être ignorées dans la référence du type marquée sur le produit. Les variantes incluses dans la procédure d'essai de type sont répertoriées dans les rapports d'essai correspondants

La conformité est vérifiée par examen.

NOTE 2 La référence du type pour les douilles E10 et E5 peut être un numéro de catalogue.

8.2 Lorsqu'il est fait usage de symboles pour le courant et pour la tension, A doit désigner les ampères et V les volts.

Il est également permis d'indiquer le courant assigné et la tension assignée en inscrivant seulement leurs valeurs numériques, le nombre indiquant le courant assigné étant placé avant ou au-dessus du nombre indiquant la tension assignée et ces valeurs étant séparées par un trait oblique ou horizontal.

Le marquage du courant et de la tension peut donc avoir les formes suivantes:

2 A 250 V ou 2/250 ou $\frac{2}{250}$.

Le symbole du courant continu doit être $\overline{\text{– – –}}$ (IEC 60417-5031:2002-10).

La protection contre la pénétration d'eau pour les douilles protégées contre le ruissellement d'eau vertical doit être indiquée par IPX1.

NOTE 2 Quand la lettre X figure dans le numéro IP, elle indique un chiffre manquant dans l'exemple, mais les deux chiffres appropriés sont marqués conformément à l'IEC 60529.

La lettre T doit être suivie de la valeur de la température assignée de fonctionnement, en degrés Celsius.

La conformité est vérifiée par examen.

8.3 Le marquage du degré de protection contre la pénétration d'eau doit être apposé sur l'extérieur de la douille.

La conformité est vérifiée par examen.

8.4 Une borne de terre doit être repérée par le symbole ⏚ (IEC 60417-5019:2002-10).

Ce symbole ne doit pas figurer sur des vis, sur des rondelles amovibles ou d'autres parties facilement amovibles.

La conformité est vérifiée par examen.

8.5 Le marquage doit être durable et facilement lisible.

La conformité est vérifiée par examen et, après la réalisation des essais de l'Article 19, en essayant d'effacer le marquage en le frottant légèrement pendant 15 s avec un chiffon imbibé d'eau et pendant 15 s avec un chiffon imbibé de white spirit.

Après les essais, le marquage doit être encore lisible.

NOTE Le white spirit utilisé est généralement composé d'hexane, avec une teneur maximale en carbures aromatiques de 0,1 % en volume, une teneur en kauri-butanol de 29, une température d'ébullition initiale d'environ 65 °C, une température d'ébullition finale d'environ 69 °C et une densité spécifique d'environ 0,68 g/cm^3.

IECNORM.COM : Click to view the full PDF of IEC 60238:2016 RLV

9 Dimensions

9.1 Les douilles E10, E14, E27 et E40 doivent être conformes aux feuilles de norme en vigueur de la série IEC 60061.

La conformité doit être vérifiée par des mesures conformément à la feuille de norme 7005-20, de l'IEC 60061-2.

Les dimensions minimales du filetage et la dimension X doivent être vérifiées au moyen des calibres conformes aux feuilles de norme 7006-25 (E10, E14 et E40) et 7006-25A (E27) ainsi qu'au moyen du calibre conforme à la feuille de norme 7006-26 de l'IEC 60061-3.

Les douilles conçues avec un filetage à filet rond pour bagues supports d'abat-jour et les bagues supports d'abat-jour doivent satisfaire à l'IEC 60399.

La conformité est vérifiée au moyen des calibres indiqués dans l'IEC 60399.

9.2 Les douilles doivent permettre l'introduction de toutes les lampes correspondantes jusqu'à l'obtention du contact.

La conformité est vérifiée au moyen de calibres conformes à l'édition en cours des feuilles de norme suivantes de l'IEC 60061-3 et d'après les indications données par ces feuilles:

- *douilles E14: 7006-30 et 7006-31;*
- *douilles-bougies E14: 7006-30A et 7006-31;*
- *douilles E27: 7006-21 et 7006-22A;*
- *douilles E40: 7006-23 et 7006-24.*

En attendant les spécifications des calibres pour les douilles E5 et E10, la vérification de la réalité du contact se fait à l'aide des lampes correspondantes. Il est entendu que le fabricant de la douille fournira à cet effet les lampes pour lesquelles la douille a été prévue.

La vérification de la réalité du contact est effectuée sur les douilles à l'état de livraison, ainsi qu'après les essais des Articles 19 et 20.2.

Uniquement pour les douilles utilisées dans des appareils autres que les luminaires:

Si les dispositifs de fixation des douilles font partie intégrante du bord et que la douille est destinée à être utilisée uniquement avec certaines lampes normalisées, ces parties du bord de la douille sont susceptibles d'interférer avec le calibre de vérification du contact correspondant. Dans ce cas, la conformité avec les exigences des dimensions extérieures des lampes selon l'IEC 60630 pour la lampe concernée doit être vérifiée. A la suite de ce contrôle, le calibre de vérification du contact doit être utilisé après le retrait des parties de la douille interférant avec le calibre.

Pour l'essai de telles douilles, deux spécimens supplémentaires spécialement préparés pour accepter le calibre de vérification de contact sont nécessaires.

9.3 Les dimensions suivantes ne doivent pas être inférieures aux valeurs indiquées dans le Tableau 1.

IECNORM.COM : Click to view the full PDF of IEC 60238:2016 RLV

Tableau 1 – Epaisseur des chemises filetées et des contacts

Dimension	Douille				
	E5	E10	E14	E27	E40
Epaisseur de la chemise filetée éventuelle (mm):					
– si la chemise est libre	0,20	0,20	0,30	0,30	0,50
– si la chemise comporte un isolant appliqué au filetage sur une distance totale d'au moins trois quarts du pourtour de la chemise	0,15	0,15	0,25	0,25	0,40
Epaisseur des contacts latéraux ou centraux, s'ils sont élastiques (mm)	0,18	0,18	0,28	0,38	0,48[a]
[a] Pour l'emploi de contacts latéraux dans les douilles E40, voir 13.11.					

La conformité est vérifiée par des mesures.

NOTE 1 Les épaisseurs sont mesurées à l'aide d'un micromètre à pointes et rochet d'encliquetage.

Pour la chemise filetée, deux séries de trois mesures sont effectuées, chaque série le long de deux génératrices quelconques de la chemise. La valeur moyenne des six mesures doit être au moins égale à la valeur spécifiée.

NOTE 2 La suppression des exigences relatives aux dimensions est à l'étude.

9.4 La longueur effective du filetage éventuel servant à assembler la chemise extérieure et le fond des douilles doit répondre à l'une des exigences suivantes, étant toutefois entendu qu'au moins un tour entier est en prise.

La longueur effective du filetage ne doit pas être inférieure aux valeurs indiquées dans le Tableau 2, ou au moins deux tours entiers doivent être en prise et l'essai de 16.3 doit être satisfait pour un couple égal à 1,2 fois le couple spécifié en 16.2.

Tableau 2 – Longueurs effectives minimales du filetage

Dimension	Douille		
	E14	E27	E40
Longueur effective minimale du filetage (mm):			
– Douilles métalliques pour filetage roulé	5,0	7,0	10,0
– Douilles métalliques pour filetage décolleté	5,0	5,0	7,0
– Douilles en matière isolante	5,0	7,0	10,0

Ces exigences ne sont pas applicables aux douilles E5 et E10.

La conformité est vérifiée par des mesures.

9.5 Les entrées taraudées des douilles doivent être pourvues d'un des filetages suivants:

– douilles E14: M10×1;

– douilles E27: M10×1, M13×1 ou M16×1;

– douilles E40: M13×1, M16×1 (ou G3/8A).

NOTE 1 La valeur entre parenthèses n'est pas préférentielle; par ailleurs, l'entrée taraudée M10 est généralement réservée au câblage interne des luminaires.

NOTE 2 En France, les entrées filetées des douilles avec des filetages de 11 mm × 19 TPI et 17 mm × 19 TPI (filets par pouce) sont autorisées pour le remplacement.

Le filetage de l'entrée doit être conforme aux Figures 1a ou 1b.

IECNORM.COM : Click to view the full PDF of IEC 60238:2016 RLV

Ces exigences ne sont pas applicables aux douilles E5 et E10.

La conformité est vérifiée par des mesures et au moyen de calibres conformes aux Figures 2a ou 2b.

En cas de doute, le calibre est introduit dans l'entrée avec application d'un couple de 0,5 Nm.

9.6 Les cotes des entrées taraudées des douilles et des vis d'arrêt éventuelles ne doivent pas être inférieures aux valeurs indiquées dans le Tableau 3.

Tableau 3 – Dimensions des entrées taraudées et des vis d'arrêt

Dimensions en millimètres

Dimension	Diamètre nominal du filetage	
	M10×1 M13×1	M16×1 G3/8A
Longueur du filetage:		
– entrée métallique	3	8
– entrée en matière isolante	5	10
Diamètre de la vis d'arrêt:		
– vis avec tête	2,5	3,0
– vis sans tête:		
– une seule vis	3,0	4,0
– plus d'une vis	3,0	3,0

Un écart négatif de 0,15 mm par rapport aux valeurs nominales du diamètre du filetage est admis.

La conformité est vérifiée par des mesures.

Ces exigences ne sont pas applicables aux douilles E5 et E10.

NOTE S'il est nécessaire de démonter la douille pour vérifier la conformité aux exigences de 9.3 à 9.6, cette vérification est effectuée après l'essai de l'Article 18.

9.7 Les douilles doivent être conçues de façon à ne pas empêcher le vissage et le dévissage correct des lampes, même si leurs culots sont légèrement entaillés. En aucun cas les contacts de la douille ne doivent présenter d'arêtes coupantes pour le culot de la lampe.

La conformité est vérifiée par l'essai suivant:

Pour les douilles E27, la vérification doit s'effectuer au moyen d'un calibre conforme à l'édition en vigueur de la feuille de norme 7006-22B de l'IEC 60061-3.

Pour les douilles autres que la douille E27, la conformité doit être vérifiée par examen.

10 Protection contre les chocs électriques

10.1 Les douilles E5, E10, E14 et E27 doivent être conçues de façon que le culot de la lampe ne soit pas accessible lorsqu'il devient actif pendant son insertion.

NOTE 1 Les détails pour la vérification de conformité vis-à-vis de la protection contre les contacts accidentels avec des parties actives pendant l'introduction des douilles E5 et E10 sont à l'étude. En conséquence, les douilles E10 pour une tension assignée supérieure à 60 V peuvent être vendues uniquement aux fabricants de luminaires ou d'autres équipements.

IECNORM.COM : Click to view the full PDF of IEC 60238:2016 RLV

Pour les douilles E10 ayant une tension assignée supérieure à 60 V, la protection contre les chocs électriques est susceptible d'être assurée par des mesures prises sur le luminaire ou un autre équipement dans lequel les douilles sont utilisées.

Les douilles E40 doivent être conçues de façon que le culot de la lampe ne soit pas accessible lorsqu'elles sont vissées à fond.

Les douilles-bougies sont soumises aux essais sans leur partie décorative à moins que l'enlèvement de cette partie ne rende la douille manifestement inutilisable.

La conformité est vérifiée de la manière suivante:

– *dans le cas des douilles E10, au moyen de lampes correspondantes et du doigt d'épreuve normalisé, représenté à la Figure 16. Pour les besoins de l'essai, le fabricant de douilles doit fournir les lampes pour lesquelles les douilles sont prévues;*
– *dans le cas des douilles E14, E27 et E40, au moyen de calibres conformes à l'édition en vigueur des feuilles de norme suivantes de l'IEC 60061-3, à savoir:*
  - *7006-31 pour les douilles E14;*
  - *7006-22A pour les douilles E27;*
  - *7006-24 pour les douilles E40.*

NOTE 2 De façon à assurer la protection contre les chocs électriques pendant l'insertion sur des douilles neuves, les essais selon le paragraphe 10.1 sont réalisés avec des spécimens neufs.

10.2 Les parties extérieures des douilles protégées et indépendantes doivent être conçues de telle façon que les parties actives de la douille prête à l'emploi et munie de la lampe correspondante soient inaccessibles.

Les douilles-bougies sont soumises aux essais sans leur partie décorative, à moins que l'enlèvement de cette partie ne rende la douille manifestement inutilisable.

La conformité est vérifiée au moyen du doigt d'épreuve normalisé.

Pour la réalisation de l'essai:

– *les douilles protégées sont montées comme en usage normal, par exemple sur un support fileté ou sur une pièce similaire, le cas échéant, et équipées de conducteurs de la section la plus défavorable pour laquelle les douilles sont prévues;*
– *les douilles indépendantes doivent être montées comme en usage normal sur une surface plane appropriée.*

Le doigt d'épreuve normalisé représenté à la Figure 16 est appliqué dans toutes les positions possibles avec une force de 10 N, le contact électrique avec les parties actives étant décelé au moyen d'un indicateur électrique.

Il est recommandé d'utiliser une tension d'au moins 40 V.

NOTE Les douilles non protégées ne sont soumises aux essais qu'après avoir été installées de façon appropriée dans un luminaire ou autre enveloppe supplémentaire.

Pour les douilles E5 et E10 possédant une partie insérable séparée montée dans un manchon extérieur, la partie insérable doit être soumise à une force de traction de 60 N pendant 1 min dans le sens axial.

L'essai doit être effectué manuellement afin de simuler tout défaut d'alignement axial apparaissant normalement en pratique. Il convient que le mouvement de désalignement axial réalisé durant l'essai soit égal à 10° maximum dans toute direction.

IECNORM.COM : Click to view the full PDF of IEC 60238:2016 RLV

Au cours de l'essai, la partie insérable ne doit pas se desserrer au point de rendre les parties actives accessibles par le doigt d'épreuve normalisé.

10.3 Les parties assurant une protection contre un contact accidentel avec le culot de la lampe doivent être convenablement fixées de façon qu'elles ne puissent se détacher lorsqu'une lampe qui aurait été fortement serrée est enlevée, ou par la rotation éventuelle de l'abat-jour.

La conformité est vérifiée par l'essai suivant:

L'assemblage entre le fond et la chemise extérieure est serré d'avance en appliquant un moment de torsion égal aux deux tiers du moment de torsion d'essai spécifié ci-dessous. Les parties appropriées sont alors soumises à un couple de torsion pendant 1 min en appliquant les valeurs d'essai suivantes dans le sens contraire des aiguilles d'une montre:

– *1 Nm pour les douilles E14;*
– *2 Nm pour les douilles E27.*

La douille est montée comme en usage normal et est soumise à l'essai d'abord avec le culot, puis sans le culot d'essai approprié suivant la Figure 13 (culot d'essai B) ou la Figure 14.

Après l'essai, les parties assurant une protection contre un contact accidentel avec le culot de la lampe ne doivent pas être démontées.

Il ne doit pas être possible de démonter les douilles E5 et E10 sans l'aide d'un outil.

Des exigences pour les douilles E40 (voir la Figure 15) sont à l'étude.

10.4 Lorsque la douille est prévue pour assurer la fixation d'un abat-jour, cette fixation est réalisée par des moyens séparés, tels qu'une bague d'abat-jour; la fixation de celui-ci entre les parties de la douille assurant la protection contre les chocs électriques n'est pas permise.

La conformité est vérifiée par examen.

10.5 Les parties extérieures

– des douilles protégées contre le ruissellement d'eau vertical,
– des douilles à tension assignée supérieure à 250 V,
– des douilles à interrupteur, et
– des douilles E5 et E10

doivent être en matière isolante, à l'exception des entrées taraudées et des parties qui ne peuvent être mises sous tension, même dans l'éventualité d'un défaut.

La laque ou l'émail n'est pas considéré comme une protection adéquate au sens de l'Article 10.

La conformité est vérifiée par examen.

NOTE 1 Les parties qui sont séparées des parties actives par une double isolation ou par une isolation renforcée sont considérées comme des parties qui ne sont pas susceptibles de devenir actives dans l'éventualité d'un défaut.

NOTE 2 Une partie extérieure qui ne peut pas devenir active, même dans l'éventualité d'un défaut, est par exemple une bague d'abat-jour métallique montée à l'extérieur d'une douille en matière isolante.

Les douilles à interrupteur comportant des parties métalliques extérieures sont autorisées sous les conditions de 13.3.

IECNORM.COM : Click to view the full PDF of IEC 60238:2016 RLV

11 Bornes

11.1 Les douilles autres que celles pourvues de fils de raccordement (sortie de fils) doivent être munies de bornes permettant le raccordement de conducteurs ayant les sections nominales suivantes:

– 0,5 mm^2 à 0,75 mm^2 pour les douilles E10;
– 0,5 mm^2 à 1,0 mm^2 pour les douilles E14 et E27 à entrée taraudée M10×1;
– 0,5 mm^2 à 2,5 mm^2 pour les autres douilles E27;
– 1,5 mm^2 à 4 mm^2 pour les douilles E40 prévues pour un courant assigné de 16 A;
– 2,5 mm^2 à 6 mm^2 pour les douilles E40 prévues pour un courant assigné de 32 A.

La conformité est vérifiée par examen et en raccordant les conducteurs des plus petites et des plus grandes sections spécifiées. Pour les douilles à serre-fils, les douilles E10, E14 ainsi que les douilles E27 à entrée taraudée M10×1, un conducteur à âme câblée est utilisé; dans tous les autres cas, les conducteurs sont à âme massive.

Les douilles à entrée taraudée sont soumises à l'essai dans un conduit fileté.

Les douilles E27 à bornes sans vis destinées à être utilisées seulement par des fabricants de luminaires ou d'autres équipements peuvent ne pas satisfaire aux exigences relatives à toutes les sections nominales appropriées.

11.2 Connexions

11.2.1 Les douilles doivent être pourvues d'au moins un des moyens de connexion suivants:

– bornes à vis;
– bornes sans vis;
– pattes ou broches pour connexions à poussoir;
– broches pour fil enroulé;
– languettes de soudage;
– fils de connexion (sorties).

Les bornes à vis et les écrous doivent avoir un pas de vis métrique conforme à la norme ISO ou un filetage ayant un pas et une résistance mécanique comparables.

Les conducteurs peuvent être connectés par soudage, brasage, sertissage, ou par tout autre moyen équivalent, aux douilles E5, E10 et à toute autre petite douille similaire.

Les douilles à bornes sans vis, à moins qu'elles ne soient prévues pour la vente aux fabricants de luminaires ou d'équipements, doivent être pourvues de bornes pouvant recevoir de manière satisfaisante aussi bien les conducteurs rigides (massifs ou toronnés) que les câbles et conducteurs flexibles.

La conformité est vérifiée par les essais de 11.2.2.

11.2.2 Les bornes doivent satisfaire aux exigences suivantes étant entendu que les exigences relatives au câblage interne concernent le câblage interne aux douilles indépendantes et le câblage interne aux luminaires, lorsqu'il s'agit de douilles à incorporer.

Tous les essais de bornes doivent être exécutés sur des spécimens séparés qui n'ont été soumis auparavant à aucun autre essai:

IECNORM.COM : Click to view the full PDF of IEC 60238:2016 RLV

– *les bornes à serrage sous tête de vis doivent être conformes aux spécifications de 11.3 à 11.6 compris et de 11.8;*

– *les bornes sans vis doivent être conformes à l'Article 15 de l'IEC 60598-1, pourvu que l'essai d'échauffement soit effectué à la température assignée de fonctionnement ± 5 °C;*

– *les pattes ou broches pour connexions à poussoir doivent être conformes à l'Article 15 de l'IEC 60598-1;*

– *les bornes à vis pour fil enroulé doivent être conformes à l'IEC 60352-1. L'enroulement du fil ne s'applique qu'au fil rond, massif, unique, utilisé pour le câblage interne;*

– *les languettes à souder doivent être conformes aux exigences de bonne soudabilité. Les exigences appropriées figurent dans l'IEC 60068-2-20;*

– *les fils de raccordement (sorties de fils) doivent être conformes aux exigences spécifiées en 11.10.*

11.3 Les bornes doivent être fixées de façon qu'elles ne puissent pas prendre de jeu lors du serrage ou du desserrage des conducteurs.

Pour les bornes à vis, la conformité est vérifiée par examen et en serrant et desserrant 10 fois un conducteur de la plus grande section spécifiée en 11.1, le couple de serrage étant égal aux deux tiers du couple de torsion spécifié à l'Article 14 de l'IEC 60598-1.

NOTE Les bornes peuvent être protégées contre le desserrage par une vis de fixation disposée sans jeu appréciable dans un logement, ou par d'autres dispositifs appropriés. Le surmoulage d'une matière de remplissage sans autre moyen de blocage n'est pas considéré comme suffisant.

11.4 Les bornes à vis doivent être conçues de façon que l'âme du conducteur soit serrée entre deux surfaces métalliques avec une pression de contact suffisante, sans endommager l'âme. Les bornes doivent être conçues de façon que l'âme du conducteur ne puisse pas s'échapper lors du serrage des vis ou des écrous. Elles doivent permettre le raccordement des conducteurs sans préparation spéciale (telle que soudage des brins de l'âme, utilisation de cosses, confection d'œillets, etc.).

La conformité est vérifiée par examen des conducteurs après le raccordement prévu en 11.1 et après l'essai de 20.3.

NOTE Les âmes sont considérées comme étant endommagées si elles présentent des entailles profondes ou du cisaillement.

11.5 Les bornes à trous doivent avoir des dimensions au moins égales à celles qui sont indiquées dans le Tableau 4.

Tableau 4 – Dimensions minimales des bornes à trous

Douille	Diamètre nominal de la partie filetée mm	Diamètre du trou pour le conducteur mm	Longueur de la partie filetée dans la borne mm
E10	2,5	2,5	1,8
E14	2,5	2,5	1,8
E27	2,5	2,5	1,8
E40	3,5	3,5	2,5
Le diamètre du trou ne doit pas dépasser celui de la vis de plus de 0,6 mm.			

La longueur de la partie filetée de la vis de raccordement doit être au moins égale à la somme du diamètre du trou pour le conducteur et de la longueur de la partie filetée dans le corps de la borne.

NOTE La longueur de la partie filetée d'une borne à trou est mesurée à l'endroit où le filetage est coupé par le trou de la borne.

La conformité est vérifiée par des mesures.

IECNORM.COM : Click to view the full PDF of IEC 60238:2016 RLV

11.6 Les bornes à serrage sous tête de vis doivent avoir des dimensions au moins égales à celles qui sont indiquées dans le Tableau 5.

Tableau 5 – Dimensions minimales des bornes à serrage

Douille	Diamètre nominal de la partie filetée mm	Longueur de la tige de la vis mm	Longueur de la partie filetée dans l'écrou mm	Différence nominale entre les diamètres de la tête et du corps de la vis mm	Hauteur de la tête de la vis mm
E10	2,5	4,0	1,5	2,5	1,4
E14	3,0	5,0	1,5	3,0	1,8
E27	3,5	5,0	1,5	3,5	2,0
E40	4,0	6,0	2,5	4,0	2,4

S'il est interposé entre la tête de la vis et le conducteur une pièce intermédiaire, par exemple une rondelle ou une plaquette de serrage protégée contre la rotation, la différence entre les diamètres de la tête et du corps de la vis peut être réduite de 1 mm.

La conformité est vérifiée par des mesures.

Un écart négatif de 0,15 mm par rapport aux valeurs nominales du diamètre de la partie filetée et de la différence entre les diamètres de la tête et du corps de la vis est admis.

NOTE S'il est nécessaire de démonter la douille pour vérifier la conformité aux exigences de 11.5 et 11.6, cette vérification est effectuée après l'essai de l'Article 18.

11.7 Les bornes doivent être disposées de manière qu'après le raccordement correct des conducteurs, il n'y ait aucun risque de contact accidentel entre les parties actives et les parties métalliques accessibles.

La conformité est vérifiée par examen et par l'essai suivant:

L'enveloppe isolante est enlevée sur une longueur de 4 mm à l'extrémité d'un conducteur souple de la plus faible section nominale spécifiée en 11.1. Un brin de conducteur toronné est décâblé et les autres sont complètement introduits et serrés dans la borne de la douille montée et installée comme en usage normal (vis de serrage serrées, etc.).

Le brin décâblé est plié dans toutes les directions possibles sans déchirer l'enveloppe isolante mais sans former d'angles vifs le long des cloisons.

Le brin décâblé d'un conducteur relié à une borne active ne doit toucher aucune partie métallique qui n'est pas une partie active, et celui d'un conducteur relié à une borne de terre ne doit toucher aucune partie active.

Si nécessaire, l'essai est répété en plaçant le brin décâblé dans une autre position.

NOTE L'interdiction de former des angles vifs le long des cloisons n'implique pas que le brin décâblé reste tendu durant l'essai. Des angles vifs, par contre, sont formés si de tels angles sont considérés comme susceptibles d'apparaître au cours du montage normal de la douille. Voir aussi 13.3.

11.8 Dans le cas de bornes à trou dans lesquelles l'extrémité du conducteur, après raccordement, n'est pas visible, le trou de la borne doit se prolonger au-delà de la vis de raccordement sur une longueur au moins égale à la moitié du diamètre de la vis ou sur une longueur de 2,5 mm, selon la valeur la plus élevée.

La conformité est vérifiée par des mesures.

IECNORM.COM : Click to view the full PDF of IEC 60238:2016 RLV

11.9 Les bornes à montage souple dans la douille ne doivent pas présenter de jeu latéral appréciable, et ne doivent pas se déplacer de plus de 3 mm dans le sens longitudinal lors de l'introduction ou du retrait d'une lampe.

La conformité est vérifiée par des mesures.

11.10 Les exigences de 11.2 à 11.6 inclus et de 11.8 ne s'appliquent pas aux douilles destinées à être montées en usine dans des luminaires et qui sont pourvues de fils de raccordement (sortie de fils).

Les douilles destinées à être montées en usine dans des luminaires ou incorporées dans des équipements peuvent être pourvues de fils de raccordement (sortie de fils), de raccords à connexion par clip ou de moyens d'une efficacité égale.

Les fils de raccordement (sortie de fils) doivent être reliés aux douilles par soudage, brasage, sertissage ou par tout autre moyen au moins équivalent.

Les fils de raccordement doivent être des conducteurs isolés.

L'isolation de l'extrémité libre des conducteurs peut être dénudée.

La fixation des conducteurs dans la douille doit résister aux forces mécaniques pouvant survenir en usage normal.

La conformité est vérifiée par examen et par l'essai suivant, qui est effectué après l'essai de 20.2 sur les trois mêmes spécimens.

Chaque fil de raccordement est soumis à une force de traction de 20 N, la force étant appliquée sans secousses pendant 1 min dans la direction la plus défavorable.

Pendant l'essai, les fils de raccordement en essai ne doivent pas bouger de leur point de fixation.

Après l'essai, les douilles ne doivent présenter aucun endommagement au sens de la présente norme.

12 Dispositions en vue de la mise à la terre

12.1 Les douilles à entrée taraudée, les douilles à serre-fils et les douilles à embase, équipées d'un dispositif de mise à la terre, autres que celles pourvues de conducteurs de sortie, doivent avoir au moins une borne de terre intérieure; d'autres douilles, sans entrée taraudée, par exemple les douilles à incorporer, peuvent être équipées d'un dispositif de mise à la terre extérieur.

La conformité est vérifiée par examen.

NOTE Les douilles destinées à être mises à la terre mais qui ne comportent pas de borne de terre ou de fils de mise à la terre ne sont pas destinées à la vente au détail.

12.2 Les parties métalliques accessibles des douilles de lampes sans borne de terre, qui peuvent devenir actives en cas de défaut d'isolement, doivent permettre une mise à la terre fiable.

Il doit y avoir une continuité de terre entre le fond métallique de la douille et la chemise extérieure, si elle est en métal, lorsque la chemise n'est pas séparée des parties actives par une isolation double ou renforcée.

IECNORM.COM : Click to view the full PDF of IEC 60238:2016 RLV

NOTE Dans le cadre de cette exigence, les petites vis métalliques isolées et celles assurant la fixation des culots ou des habillages ne sont pas considérées comme des parties accessibles qui sont susceptibles de devenir actives en cas de défaut d'isolement.

La conformité est vérifiée par l'essai suivant:

Un conducteur rigide ayant la plus petite section transversale pour laquelle la douille est prévue est monté dans la borne de mise à la terre, dans la mesure où il y en a une.

Lorsque la continuité de terre entre le fond et la chemise extérieure de la douille doit être vérifiée, le raccordement entre ces parties doit être serré avec le couple de torsion spécifié de:

– *1 Nm pour les douilles E14;*
– *2 Nm pour les douilles E27;*
– *4 Nm pour les douilles E40.*

Immédiatement après les essais de 15.3, la résistance entre les moyens de mise à la terre et le fond (ou la chemise extérieure si nécessaire) est mesurée.

Pour les douilles de lampes avec une borne de mise à la terre, le moyen de mise à la terre est le point où le conducteur sort de la borne et pour les douilles de lampes sans borne de terre, c'est le point où la connexion de mise à la terre est destinée à être faite.

Un courant d'au moins 10 A, provenant d'une source avec une tension hors charge ne dépassant pas 12 V, doit traverser la borne de mise à la terre et chacune des parties métalliques accessibles successivement.

La chute de tension entre les moyens de mise à la terre et les parties métalliques accessibles doit être mesurée. La résistance calculée à partir de la chute de tension et du courant ne doit pas dépasser 0,1Ω.

12.3 Les bornes de terre doivent satisfaire aux exigences de l'Article 11.

Leurs organes de serrage doivent être protégés efficacement contre un desserrage accidentel, et il ne doit pas être possible de desserrer à la main les bornes à vis et de desserrer fortuitement à la main les bornes sans vis.

La conformité est vérifiée par examen et par les essais de l'Article 11.

NOTE En général, les constructions usuelles des bornes transportant le courant (conformes aux exigences de la présente norme) ont une élasticité suffisante pour pouvoir satisfaire à cette dernière exigence; pour d'autres constructions, il peut être nécessaire de prévoir des mesures spéciales telles que l'utilisation d'un élément suffisamment élastique qui ne soit pas susceptible d'être enlevé par inadvertance.

12.4 Le métal des bornes de terre doit être tel qu'il n'y ait pas de risque de corrosion résultant du contact avec le cuivre du conducteur de terre.

La vis ou le corps de la borne de terre doit être en laiton ou en un autre métal résistant aussi bien à la corrosion, tandis que les surfaces de contact doivent être en métal nu.

La conformité est vérifiée par examen.

NOTE Le risque de corrosion est particulièrement grand lorsque le cuivre est en contact avec l'aluminium.

12.5 Les parties métalliques du dispositif d'arrêt de traction et de torsion, y compris les vis de serrage, doivent être isolées du circuit de terre.

La conformité est vérifiée par examen.

IECNORM.COM : Click to view the full PDF of IEC 60238:2016 RLV

13 Construction

13.1 Les douilles doivent avoir un filetage du type Edison pour maintenir la lampe.

Pour les douilles autres que E5 et E10, ce filetage doit être soit métallique et continu sur une longueur non inférieure à celle qui est spécifiée dans l'édition en vigueur de la feuille de norme 7005-20 de l'IEC 60061-2, soit satisfaire aux exigences suivantes.

NOTE L'exigence relative à la longueur minimale du filetage des douilles E5 et E10 est à l'étude.

Une dérogation aux exigences pour filetage métallique est admise pourvu que les tolérances de conception et de fabrication soient telles que l'engagement approprié des calibres soit assuré pendant toute la vie de la douille. D'autres informations à ce sujet seront données dans l'annexe: Essais de surveillance, qui est à l'étude.

De plus, l'ensemble borne/contact et la chemise filetée doivent être construits et positionnés de façon à empêcher toute inclinaison et toute rotation susceptibles de nuire à l'utilisation de la douille.

Une dérogation à l'exigence pour filetage ininterrompu est admise si cela est nécessaire pour obtenir un avantage technique particulier tel qu'un dispositif retenant la lampe logé dans un évidement.

La conformité est vérifiée par examen et par un essai manuel avec les calibres mentionnés à l'Article 8, appliqués dans toutes les positions qui peuvent être atteintes avec un effort raisonnable, et la douille doit encore satisfaire aux essais avec les calibres, en particulier le calibre d'épaisseur de 0,08 mm × 5,0 mm.

De plus, il ne doit pas être possible de rayer le col de l'ampoule d'une lampe conforme aux normes au cours de l'introduction ou de l'enlèvement.

Le filetage mâle de l'adaptateur doit être de même dimension, ou plus grand, que la chemise femelle filetée de l'adaptateur.

13.2 Il doit être prévu un espace adapté pour les conducteurs d'alimentation dans le fond de la douille. Les parties de la douille qui peuvent entrer en contact avec des conducteurs isolés ne doivent pas présenter d'arêtes vives ni de forme susceptible d'endommager l'isolation.

Les douilles à entrée taraudée doivent comporter un dispositif limitant la pénétration du tube dans l'entrée, à moins que, par construction, il soit de toute évidence peu probable que le tube puisse pénétrer trop profondément dans l'entrée, comme c'est le cas pour certaines douilles-bougies.

La conformité est vérifiée par examen et par un essai de montage, en équipant la douille de câbles ou fils souples de la plus grande section spécifiée en 11.1 s'il s'agit de douilles E14 ou de douilles E27 à entrées taraudées M10×1, et de conducteurs d'une section nominale inférieure d'un échelon à la plus grande section spécifiée pour les autres douilles E27 et pour les douilles E40.

Pour les douilles à serre-fils, les douilles E14 et les douilles E27 à entrée taraudée M10×1, un câble souple sous gaine ordinaire est utilisé; dans tous les autres cas, deux ou trois conducteurs isolés au PVC à une seule âme sont utilisés.

Dans le cas de douilles à entrée taraudée, le fond de la douille est vissé sur une longueur de tube de 10 cm environ. Ensuite, les câbles sont introduits dans le tube et dans le fond. Les extrémités des câbles, après une préparation normale, sont raccordées aux bornes de la douille. Dans la mesure du possible, la connexion est effectuée à la partie supportant les bornes dans une position telle que la plus petite distance entre le plan du bord supérieur du

IECNORM.COM : Click to view the full PDF of IEC 60238:2016 RLV

fond et la partie la plus proche des bornes soit de 10 mm. Les bornes étant maintenues dans cette position, les câbles sont serrés et entravés à l'extrémité libre du tube. Puis la douille est assemblée.

Après démontage de la douille, les câbles ne doivent pas être endommagés.

NOTE 1 Pour les douilles E27 et E40, un essai avec les conducteurs de la section maximale spécifiée en 11.1 est à l'étude.

NOTE 2 L'exigence relative aux arêtes vives ne vise pas l'extrémité du filetage de l'entrée taraudée étant donné qu'elles ne sont pas en contact avec les conducteurs quand les douilles ont été montées sur un tube.

En cas de doute concernant le dispositif limitant la pénétration du tube dans l'entrée d'une douille à entrée taraudée, la douille est vissée sur un tube ou une broche en acier, terminé par une section droite plane (arêtes non arrondies). Le tube ou la broche comporte un filet complet ayant les dimensions minimales indiquées aux Figures 1a ou 1b.

Pendant cet essai, le couple de torsion suivant est appliqué pendant 1 min:

- *1,0 Nm pour les entrées taraudées M10×1;*
- *1,3 Nm pour les entrées taraudées M13×1;*
- *1,6 Nm pour les entrées taraudées M16×1 et G3/8A.*

Après cet essai, le tube ou la broche ne doit pas avoir pénétré dans l'espace prévu dans le fond de la douille pour les conducteurs d'alimentation, et la douille ne doit présenter aucune détérioration qui nuirait à son emploi ultérieur.

13.3 Les parties accessibles des douilles à interrupteur doivent être en matière isolante, à moins que, par sa construction, un conducteur sous tension sorti de sa borne ne puisse entrer en contact avec des parties métalliques accessibles ou avec le circuit de terre et que les vis des bornes ou de l'entrée taraudée, après desserrage accidentel, ne puissent ponter des parties métalliques accessibles, y compris les bornes de terre, et des parties actives.

La conformité est vérifiée par examen.

NOTE Cette exigence n'implique pas la présence obligatoire d'un revêtement isolant complet ou partiel.

13.4 Dans le cas de douilles à chemise métallique filetée et à chemise métallique extérieure, le contact entre ces parties doit être empêché par une bague d'isolement qui ne doit pouvoir être séparée manuellement ni des parties actives ni de la chemise métallique extérieure.

La conformité est vérifiée par examen.

NOTE La protection assurée par la bague d'isolement est considérée comme suffisante si la longueur est approximativement égale à celle de la chemise filetée.

13.5 Il doit être possible de bloquer l'entrée taraudée des douilles sur le tube. De tels dispositifs peuvent soit faire partie de la douille soit être prévus dans la conception du luminaire.

Sauf pour les douilles à angles, le dispositif de blocage doit pouvoir être manœuvré de l'intérieur, s'il fait partie de la douille.

Si un dispositif de blocage est prévu dans la conception du luminaire, son efficacité ne peut pas être vérifiée lors de l'essai de la douille; cette vérification doit être effectuée lors des essais pratiqués sur le luminaire.

NOTE De telles douilles ne sont pas destinées à la vente au détail.

IECNORM.COM : Click to view the full PDF of IEC 60238:2016 RLV

Cette exigence ne s'applique pas aux douilles E5 et E10.

La conformité est vérifiée par examen et, pour les douilles ayant un dispositif de blocage intégré, par l'essai de 16.4.

13.6 Les douilles à serre-fils et toutes les douilles destinées au branchement en chaîne doivent comporter un dispositif permettant la fixation de la douille à un conducteur souple de façon que les extrémités des conducteurs dans les bornes ne soient soumises à aucun effort de traction ni de torsion et que le revêtement extérieur du conducteur soit serré à l'intérieur de la douille et protégé contre l'abrasion. La façon de réaliser la protection contre la traction et la torsion doit être facile à reconnaître.

Il ne doit pas être possible d'enfoncer le câble souple dans la douille au point que le câble soit soumis à des efforts mécaniques ou thermiques excessifs.

Le recours à des moyens de fortune, par exemple le procédé qui consiste à faire un nœud dans le câble ou à l'attacher avec une ficelle, n'est pas autorisé.

Le dispositif doit être en matière isolante ou muni d'un revêtement fixe isolant dans le cas où un défaut d'isolation du câble pourrait rendre actives les parties métalliques accessibles.

La construction doit être telle que ce dispositif

– soit au moins une partie fixée à la douille, ou faisant corps avec elle;
– soit approprié aux différents types de câbles souples qui peuvent être connectés à la douille;
– n'exerce aucune force excessive sur le câble;
– ne soit pas susceptible d'être endommagé lorsqu'il est serré ou desserré comme en usage normal.

Le dispositif doit convenir aux types de câbles souples suivants:

– 60245 IEC 51;
– 60245 IEC 53 ou équivalent;
– 60227 IEC 52.

La conformité est vérifiée par examen et par l'essai suivant.

La douille est équipée d'un câble souple et le dispositif d'arrêt de traction et de torsion est utilisé normalement. Les âmes du conducteur sont introduites dans les bornes et les vis sont légèrement serrées de façon que les âmes ne puissent pas se déplacer facilement. Ensuite, il ne doit pas être possible de pousser le câble plus loin dans la douille.

Puis le câble souple est soumis 100 fois, chaque fois pendant 1 s, à un effort de traction dont la valeur est indiquée dans le Tableau 6. L'effort de traction ne doit pas être appliqué par secousses.

Aussitôt après, le câble souple est soumis pendant 1 min à l'effort de torsion spécifié dans le Tableau 6.

IECNORM.COM : Click to view the full PDF of IEC 60238:2016 RLV

Tableau 6 – Valeurs de traction et de torsion

Section nominale totale de l'ensemble des conducteurs mm^2	Traction N	Couple Nm
Jusqu'à 1,5 inclus	60	0,15
Au-dessus de 1,5 à 3 inclus	60	0,25
Au-dessus de 3 à 5 inclus	80	0,35
Au-dessus de 5 à 8 inclus	120	0,35

Les douilles sont soumises aux essais avec chacun des types appropriés de câbles souples, spécifiés ci-dessus, conformes à l'IEC 60245 ou à l'IEC 60227.

L'essai est effectué d'abord avec des conducteurs ayant la plus petite section spécifiée en 11.1 et ensuite avec des conducteurs ayant soit la plus grande section que puisse avoir le dispositif de suspension, soit la plus grande section spécifiée en 11.1, suivant la section la plus petite.

Pour les douilles destinées au branchement en chaîne, l'essai est effectué avec la douille munie des câbles pour lesquels elle a été prévue. Le câble est soumis 50 fois à un effort de traction de 30 N. L'essai de torsion n'est pas effectué.

Le dispositif d'arrêt de traction et de torsion ne doit occasionner aucune détérioration du conducteur souple au cours de cet essai. A l'issue de celui-ci, le conducteur ne doit pas s'être déplacé de plus de 2 mm, et les extrémités ne doivent pas s'être déplacées notablement dans les bornes.

Afin de pouvoir mesurer le déplacement éventuel, une marque est faite sur le conducteur à l'état tendu et à une distance d'environ 2 cm du dispositif d'arrêt de traction. A l'issue de l'essai, le déplacement de la marque par rapport au dispositif d'arrêt de traction est mesuré, le conducteur étant encore soumis à la traction.

13.7 Les dispositifs de suspension des douilles protégées et indépendantes ne doivent comporter aucune partie métallique accessible susceptible de devenir active, même en cas de défectuosité de la douille. Les dispositifs de suspension destinés à être vissés dans les entrées taraudées des douilles doivent, de plus, satisfaire aux exigences de 13.2.

La conformité est vérifiée par examen et par l'essai de 13.6.

13.8 Les douilles à embase, non spécifiquement destinées à être incorporées, doivent avoir un logement pour les conducteurs d'alimentation. Ce logement doit avoir les dimensions minimales suivantes pour permettre l'entrée de câbles sortant d'un tube débouchant perpendiculairement à la surface de montage de la douille:

– hauteur 7 mm;
– longueur égale au diamètre ou à la largeur de l'embase;
– largeur 16 mm portée à 23 mm pour le diamètre de la section circulaire dans la partie centrale.

La conformité est vérifiée par des mesures.

Cette exigence dimensionnelle n'est pas applicable aux douilles E5 et E10.

13.9 L'embase des douilles à embase non spécifiquement destinées à être incorporées doit permettre leur fixation au moyen de vis ayant un diamètre d'au moins 4 mm.

IECNORM.COM : Click to view the full PDF of IEC 60238:2016 RLV

La conformité est vérifiée au moyen d'un calibre conformément à la Figure 3. Pour cet essai, la broche est introduite par l'arrière dans le trou de fixation et elle est coiffée de l'autre côté avec le manchon.

Le manchon doit pénétrer dans le logement prévu pour la tête de la vis.

Cette exigence n'est pas applicable aux douilles E5 et E10.

13.10 Lorsque l'entrée ou les entrées de câbles sont disposées à la surface extérieure accessible d'une douille à embase, ces entrées doivent permettre le passage correct de la gaine des câbles, d'un tube ou d'une canalisation etc., de manière à assurer une protection mécanique sur une distance d'au moins 1 mm mesurée à partir de la surface externe accessible de la douille à embase.

La conformité est vérifiée par mesure et par application de l'essai d'installation de 11.1.

13.11 Les contacts doivent être conçus et réalisés de façon à assurer un contact électrique sûr et fiable en usage normal.

Le fonctionnement des contacts doit être indépendant du fonctionnement d'un dispositif de blocage éventuel entre le fond et la chemise extérieure.

Les nouvelles conceptions de douilles E40 doivent être du type à chemise sous tension.

NOTE Les problèmes de contact avec des culots réels ont montré que le type à chemise sous tension constituait à cet égard la seule solution pratique.

La conformité est vérifiée par examen et par l'essai de 20.2.

Un contact latéral unique est admis.

13.12 Les douilles ne doivent pas être équipées d'un socle de prise de courant.

La conformité est vérifiée par examen.

13.13 Les dispositifs assurant le pontage du filament de la lampe ne doivent pas faire partie intégrante de la douille.

La conformité est vérifiée par examen et, le cas échéant, par un essai.

13.14 Les douilles avec dispositif de frein doivent être capables de résister à un certain couple de desserrage.

Un culot de lampe en laiton disponible dans le commerce, satisfaisant à la norme applicable, doit être inséré dans l'échantillon de douille à dispositif de frein, avec le couple approprié au type de douille, conformément aux indications du Tableau 7.

Tableau 7 – Couple d'insertion

Culot de lampe	Couple Nm
E27	1,5 ± 0,1
E40	2,0 ± 0,1

IECNORM.COM : Click to view the full PDF of IEC 60238:2016 RLV

La lampe est alors dévissée d'environ 30°. Le couple de dévissage est mesuré dans cette position.

Le couple de dévissage ne doit pas être inférieur à la valeur minimale ni supérieur à la valeur maximale indiquée dans le Tableau 8.

Tableau 8 – Couples de dévissage minimal et maximal

Culot de lampe	Couple minimal Nm	Couple maximal Nm
E27	0,5	2,0
E40	1,0	4,0

Lorsque le culot de la lampe est endommagé ou montre des signes d'usure, il convient d'utiliser pour les essais un nouveau culot.

14 Douilles à interrupteur

14.1 Les interrupteurs ne sont autorisés que dans les douilles ordinaires E14 et dans les douilles ordinaires E27 prévues pour une tension jusqu'à 250 V inclus.

La conformité est vérifiée par examen.

14.2 Les douilles à interrupteurs doivent satisfaire aux exigences de construction de 13.3 avec les exigences additionnelles des paragraphes 14.3 à 14.5, ou aux exigences correspondantes de l'IEC 61058-1.

NOTE Des lignes directrices pour la sélection des exigences correspondantes de l'IEC 61058-1 sont données à l'Annexe B.

14.3 Les interrupteurs des douilles doivent être capables d'établir et de couper l'alimentation d'une lampe à filament ou d'une lampe autoballastée d'éclairage général (GLS).

La conformité est vérifiée au moyen des essais suivants:

Les interrupteurs de douilles E14 doivent être soumis aux essais pour une température de fonctionnement de 100 °C et les interrupteurs des douilles E27 pour une température de fonctionnement de 125 °C.

Les interrupteurs des douilles destinées à être utilisées dans les réfrigérateurs ou les congélateurs doivent être soumis aux essais à la température de fonctionnement assignée.

Les interrupteurs des douilles portant un marquage de température doivent être soumis aux essais comme suit pour les températures de fonctionnement:

– *douilles E14: température marquée de la douille moins 40 °C;*
– *douilles E27: température marquée de la douille moins 50 °C.*

L'interrupteur est soumis à l'essai avec un courant alternatif (cos φ = 0,6 ± 0,05), une tension égale à 1,1 fois la tension assignée et un courant égal à 1,25 fois le courant assigné.

L'interrupteur doit être actionné d'une façon normale 200 fois (200 mouvements d'interrupteur) à des intervalles réguliers et au rythme de 30 mouvements par minute.

Ensuite, l'interrupteur est soumis à l'essai avec un courant alternatif (cos φ = 1) à la tension assignée et au courant assigné.

IECNORM.COM : Click to view the full PDF of IEC 60238:2016 RLV

L'interrupteur doit alors être actionné d'une façon normale 20 000 fois (20 000 mouvements d'interrupteur) à des intervalles réguliers et au rythme de 30 mouvements par minute.

NOTE Le remplacement de l'essai ci-dessus par l'essai correspondant de l'IEC 61058-1 est à l'étude.

A la fin de l'essai, la douille doit supporter sans défaillance les essais de résistance d'isolement et de rigidité diélectrique spécifiés en 15.4 et doit être en bon ordre de marche.

14.4 Les douilles à interrupteur doivent être construites de façon qu'il ne puisse pas se produire de contact accidentel entre les parties mobiles de l'interrupteur et les conducteurs d'alimentation.

La conformité est vérifiée par l'essai de 11.1 et par un essai manuel.

14.5 L'élément permettant d'actionner l'interrupteur doit être efficacement isolé des parties actives et ne doit pas, s'il est cassé ou endommagé, découvrir des parties actives.

La conformité est vérifiée par examen et par application des essais spécifiés en 14.3.

14.6 Il est admis de soumettre aux essais les interrupteurs de douilles destinées à être utilisées dans les réfrigérateurs ou les congélateurs avec une lampe à la puissance assignée qui correspond aux lampes prévues pour l'appareil.

15 Résistance à l'humidité, résistance d'isolement et rigidité diélectrique

15.1 L'enveloppe des douilles protégées contre le ruissellement d'eau vertical doit garantir le degré nécessaire de protection contre la pénétration d'eau.

La conformité est vérifiée par l'essai suivant.

Les douilles sont équipées des câbles ou des conduits pour lesquels elles ont été conçues.

Les douilles à embase sont montées sur une surface verticale, le trou d'écoulement éventuel étant ouvert et dirigé vers le bas. Les autres douilles sont montées avec leurs entrées de lampe dirigées verticalement vers le bas.

L'essai est réalisé au moyen d'un équipement dont le principe est indiqué à la Figure 3 de l'IEC 60529:1989. Le débit d'eau doit être suffisamment uniforme sur toute la surface de l'appareil et doit produire une chute de pluie comprise entre 3 mm et 5 mm d'eau par minute, tombant verticalement d'une hauteur de 200 mm mesurée depuis la douille. La durée de l'essai est de 10 min. L'eau employée pour l'essai doit être à une température de 15 °C ± 10 °C.

Immédiatement après ce traitement, la douille doit satisfaire à l'essai de rigidité diélectrique de 15.4 et un examen doit montrer que l'eau n'a pas pénétré en quantité appréciable.

NOTE Il est considéré que l'eau a pénétré en quantité appréciable si elle a atteint des parties actives. Dans ce cas, une chemise filetée qui n'est active que lorsqu'une lampe est introduite n'est pas considérée comme une partie active.

15.2 Les entrées dans les douilles protégées contre le ruissellement d'eau vertical doivent permettre le raccordement des conducteurs d'alimentation de façon que les gouttes d'eau coulant le long des conducteurs ne puissent pas pénétrer à l'intérieur de la douille.

La conformité est vérifiée par examen.

IECNORM.COM : Click to view the full PDF of IEC 60238:2016 RLV

15.3 Les douilles doivent résister aux conditions d'humidité qui peuvent se produire en usage normal.

La conformité est vérifiée par le traitement humide décrit en 15.3, suivi immédiatement de la mesure de la résistance d'isolement et de l'essai de rigidité diélectrique de 15.4.

Les entrées de conducteurs, s'il y en a, sont laissées ouvertes; s'il y a des entrées défonçables, l'une d'elles est défoncée.

Le traitement humide est effectué dans une enceinte humide contenant de l'air d'une humidité relative maintenue entre 91 % et 95 %. La température de l'air, en tout endroit où peuvent être placés les spécimens, est maintenue à 1 °C près à une valeur appropriée t comprise entre 20 °C et 30 °C.

Avant d'être placés dans l'enceinte humide, les spécimens sont portés à une température comprise entre t et $(t + 4)$ °C.

Les douilles sont maintenues dans l'enceinte pendant:

- *deux jours (48 h) pour les douilles ordinaires;*
- *sept jours (168 h) pour les douilles protégées contre le ruissellement d'eau vertical, classées IPX1.*

NOTE 1 Dans la plupart des cas, les spécimens peuvent être portés à la température spécifiée en les laissant à cette température pendant 4 h au moins avant le traitement humide.

NOTE 2 L'humidité relative de 91 % à 95 % peut être obtenue en plaçant dans l'enceinte humide une solution saturée de sulfate de sodium (Na_2SO_4) ou de nitrate de potassium (KNO_3) dans l'eau, cette solution ayant une surface de contact avec l'air suffisamment étendue. Afin d'obtenir les conditions imposées pour l'enceinte humide, il est important qu'un brassage constant de l'air à l'intérieur et, en général, qu'une isolation thermique de l'enceinte soient assurés.

A l'issue de ce traitement, les douilles ne doivent présenter aucun endommagement au sens de la présente norme.

15.4 La résistance d'isolement et la rigidité diélectrique doivent avoir une valeur appropriée:

a) entre parties actives de polarité différente;

b) entre de telles parties actives et les parties métalliques extérieures, y compris les vis de fixation de la base ou de l'enveloppe des douilles à embase, ainsi que les vis d'assemblage accessibles;

c) entre les surfaces internes et externes du revêtement intérieur des enveloppes métalliques, si un tel revêtement est exigé conformément à 13.3 pour assurer une protection ou si la distance entre une partie active quelconque et le métal de l'enveloppe est inférieure aux valeurs exigées dans la note de bas de page b du Tableau 13 et du Tableau 14.

La conformité est vérifiée par une mesure de la résistance d'isolement et par un essai de rigidité diélectrique, effectués immédiatement après le traitement humide dans l'enceinte humide ou dans la salle où les spécimens ont été portés à la température prescrite.

La résistance d'isolement est mesurée sous une tension continue de 500 V environ 1 min après l'application de cette tension.

La résistance d'isolement est mesurée successivement:

a) entre parties actives de polarité différente;

b) entre de telles parties actives reliées entre elles et la masse;

IECNORM.COM : Click to view the full PDF of IEC 60238:2016 RLV